AGENDA
VENETA CITY COUNCIL
MONDAY, JULY 25, 2016 – 6:30 P.M.
Veneta Administrative Center, 88184 8th Street, Veneta, Oregon

6:30 **1. CALL TO ORDER**

6:30 **2. PUBLIC COMMENT** - Maximum time 20 minutes. Speakers will be limited to 3 minutes each. The Council will not engage in any discussion or make any decisions based on public comment at this time; however, they may take comments under advisement for discussion and action at a future Council meeting.

6:40 **3. CONSENT AGENDA**

a. Accounts Payable
   i. Checks for Approval – Paid through July 14, 2016 (pgs. 3-23)
   ii. To be Paid – Payable through July 18, 2016 (pgs. 25-31)
b. Civic Calendar for August, 2016 (pg. 33)
c. Banner Permit Application from Kiwanis Club of Fern Ridge for the 2016 Motorcycle Show "N" Shine (pg. 35)
d. Banner Permit Application from St. Catherine for the annual BBQ (previously approved by R. Ingham) (pgs. 37-38)
e. Public Works Activity Report for June, 2016 (pgs. 39-40)

6:45 **4. COUNCIL BUSINESS AND REPORTS**

a. Business
   (1) Lane County Sheriff's Office Activity Report (pg. 41)
   (2) Appointment to Fill Park Board Vacancies (Positions 8 and 9) (pgs. 43-44)
   (3) Donation Request from Elmira High School Athletic Department (pgs. 45-47)
b. Council/Committee Liaison Reports

7:05 **5. STAFF REPORTS**

a. Community Development Director……..……..….....…Kay Bork
   (1) Presentation of Engineer's Report and Adoption of 8th Street Sewer Improvement LID Resolution No. 1204
      i. Agenda Item Summary (pgs. 49-75)
      ii. **Resolution No. 1204** – A RESOLUTION DESIGNATING PROPOSED WASTEWATER COLLECTION SYSTEM IMPROVEMENTS ON 8TH STREET AND DECLARING THE CITY'S INTENTION TO FORM A LOCAL IMPROVEMENT DISTRICT TO FUND SUCH IMPROVEMENTS (pgs. 77-78)

7:25 b. Finance Director……..……..…….....…Shauna Hartz
   (1) **Ordinance No. 535** – AN ORDINANCE REPEALING ORDINANCE NO. 515. For Second Reading by Title Only and Final Enactment (pg. 79)
   (2) Amendments to Title 3 of Veneta Municipal Code Related to Disposition of Personal Property
      i. Agenda Item Summary (pgs. 81-85)
      ii. **Ordinance No. 537** – AN ORDINANCE AMENDING VENETA MUNICIPAL CODE TITLE 3 CHAPTER 05. For First Reading by Title Only (pgs. 87-89)

7:45 c. Public Works Director…...…...……...……..…..…Kyle Schauer
   (1) Award of Construction Contract for 2nd & 3rd St Contract Improvements (handout)
   (2) Added Scope of Work for 2016 Pavement Preservation Projects (pgs. 91-94)
   (3) Status of the Wastewater Treatment Plant

8:05 **6. OTHER**

8:15 **7. ADJOURN**

Times are approximate. This meeting will be digitally recorded. Location is wheelchair accessible (WCA). Communication interpreter, including American Sign Language (ASL) interpretation, is available if notice is given at least 48 hours prior to the start of the meeting. Contact the City Recorder, Darci Henneman, via phone (541) 935-2191, Email dhenneman@ci.veneta.or.us, or TTY Telecommunications Relay Service 1-800-735-1232.

To access City Council meeting materials please go to http://www.venetaoregon.gov/meetings

Accounts Payable
Checks for Approval

User: mindy
Printed: 07/20/2016 - 6:55 AM

Check Number	Check Date	Fund Name	Account Name	Vendor Name	Amount
20286	06/28/2016	GENERAL FUND	Admin Supplies & Services	ASI	3.75
				Check Total:	3.75
20287	06/28/2016	WATER FUND	Telephone Services	CenturyLink Communications, LL	166.98
				Check Total:	166.98
20288	06/28/2016	GENERAL FUND	Ordinance Enforcement	C & K Market Inc	31.51
20288	06/28/2016	GENERAL FUND	Admin Supplies & Services	C & K Market Inc	37.28
20288	06/28/2016	GENERAL FUND	Admin Supplies & Services	C & K Market Inc	2.96
20288	06/28/2016	PLANNING FUND	Admin Services & Supplies	C & K Market Inc	1.59
20288	06/28/2016	GENERAL FUND	Recognitions	C & K Market Inc	36.99
				Check Total:	110.33
20289	06/28/2016	SEWER FUND	System Maintenance	C-More Pipe Co	1,915.00
				Check Total:	1,915.00
20290	06/28/2016	PARKS and RECREATION	Pool Bldg Janitorial - Maint	Comfort Flow Heating AC & Refr	206.50
				Check Total:	206.50
20291	06/28/2016	GENERAL FUND	Bail Payable	Catherine Davis	27.00
				Check Total:	27.00
20292	06/28/2016	GENERAL FUND	Travel	Claudia Denton	30.60

Check Number	Check Date	Fund Name	Account Name	Vendor Name		Amount
					Check Total:	30.60
20293	06/28/2016	SEWER FUND	Postage	EDMS Inc		40.94
20293	06/28/2016	WATER FUND	Admin Supplies & Services	EDMS Inc		15.11
20293	06/28/2016	WATER FUND	Postage	EDMS Inc		27.29
20293	06/28/2016	SEWER FUND	Admin Supplies & Services	EDMS Inc		22.67
					Check Total:	106.01
20294	06/28/2016	WATER FUND	Electricity	EPUD		2,289.20
					Check Total:	2,289.20
20295	06/28/2016	WATER FUND	Water Purchase	Eugene Water & Electric Board		1,168.99
20295	06/28/2016	WATER FUND	Water Purchase	Eugene Water & Electric Board		8,022.95
					Check Total:	9,191.94
20296	06/28/2016	WATER FUND	System Maintenance	FEI #3011 Waterworks		456.00
					Check Total:	456.00
20297	06/28/2016	GENERAL FUND	Public Relations	Figaro's Pizza		13.00
					Check Total:	13.00
20298	06/28/2016	GENERAL FUND	Public Relations	Fern Ridge Review		60.00
20298	06/28/2016	GENERAL FUND	Publishing Costs	Fern Ridge Review		16.00
20298	06/28/2016	GENERAL FUND	Publishing Costs	Fern Ridge Review		156.00
					Check Total:	232.00
20299	06/28/2016	GENERAL FUND	Accounts Payable	Fern Ridge School District 28J		7,805.16
					Check Total:	7,805.16
20300	06/28/2016	PARKS and RECREATION	Pool Equipment	Furrow Pump		558.05
					Check Total:	558.05
20301	06/28/2016	GENERAL FUND	Animal Control Contract	Greenhill Humane Society		420.00

Check Number	Check Date	Fund Name	Account Name	Vendor Name		Amount
					Check Total:	420.00
20302	06/28/2016	GENERAL FUND	Internet & Web Site Fees	Hunter Communications, Inc		91.48
20302	06/28/2016	PLANNING FUND	Internet & Web Site Fees	Hunter Communications, Inc		30.50
20302	06/28/2016	WATER FUND	Internet & Web Site Fees	Hunter Communications, Inc		121.98
20302	06/28/2016	SEWER FUND	Internet & Web Site Fees	Hunter Communications, Inc		60.99
20302	06/28/2016	LAW ENFORCEMENT FUND	Telephone Services	Hunter Communications, Inc		20.00
					Check Total:	324.95
20303	06/28/2016	WATER FUND	Tools & Small Equipment	Industrial Welding Supply		5.80
20303	06/28/2016	SEWER FUND	Tools & Small Equipment	Industrial Welding Supply		5.80
20303	06/28/2016	STREET FUND	Tools & Small Equipment	Industrial Welding Supply		5.79
					Check Total:	17.39
20304	06/28/2016	GENERAL FUND	County Fine Assessment Payable	Lane Co Accts Receivable		1,093.24
					Check Total:	1,093.24
20305	06/28/2016	GENERAL FUND	Judicial Services	Law Office of Alan J Leiman, P		371.00
					Check Total:	371.00
20306	06/28/2016	WATER FUND	Vehicle Operation&Maintenance	Les Schwab Tire Center		28.12
20306	06/28/2016	WATER FUND	Vehicle Operation&Maintenance	Les Schwab Tire Center		28.13
					Check Total:	56.25
20307	06/28/2016	PARKS and RECREATION	Pool Operating Supplies	Lincoln Aquatics		83.36
					Check Total:	83.36
20308	06/28/2016	GENERAL FUND	Miscellaneous/Discretionary	Mid Lane Cares		200.00
					Check Total:	200.00
20309	06/28/2016	GENERAL FUND	Admin Supplies & Services	Net Assets		255.00
					Check Total:	255.00
20310	06/28/2016	WATER FUND	Safety Programs & Supplies	Norwest Safety		12.90

Check Number	Check Date	Fund Name	Account Name	Vendor Name		Amount
					Check Total:	12.90
20311	06/28/2016	GENERAL FUND	State Fine Assessments Payable	ODOR - Court		809.41
					Check Total:	809.41
20312	06/28/2016	WATER FUND	System Maintenance	Oregon Water Services		4,440.00
					Check Total:	4,440.00
20313	06/28/2016	GENERAL FUND	Office Machine Maintenance	Ricoh USA, Inc.		172.84
20313	06/28/2016	PLANNING FUND	Office Machine Maintenance	Ricoh USA, Inc.		57.62
					Check Total:	230.46
20314	06/28/2016	WATER FUND	Equipment Repairs	Sonsray Machinery		380.73
20314	06/28/2016	SEWER FUND	Equipment Repairs	Sonsray Machinery		380.73
					Check Total:	761.46
20315	06/28/2016	GENERAL FUND	Attorney & Legal Services	Speer Hoyt LLC		199.10
20315	06/28/2016	GENERAL FUND	Attorney & Legal Services	Speer Hoyt LLC		778.30
20315	06/28/2016	STORMWATER DRAINAGE	Attorney & Legal Services	Speer Hoyt LLC		28.60
20315	06/28/2016	SEWER FUND	Attorney & Legal Services	Speer Hoyt LLC		40.00
20315	06/28/2016	WATER FUND	Attorney & Legal Services	Speer Hoyt LLC		40.00
20315	06/28/2016	GENERAL FUND	Attorney & Legal Services	Speer Hoyt LLC		235.30
20315	06/28/2016	PLANNING FUND	Attorney & Legal Services	Speer Hoyt LLC		814.50
20315	06/28/2016	WATER FUND	Attorney & Legal Services	Speer Hoyt LLC		60.00
20315	06/28/2016	SEWER FUND	Attorney & Legal Services	Speer Hoyt LLC		60.00
20315	06/28/2016	STORMWATER DRAINAGE	Attorney & Legal Services	Speer Hoyt LLC		42.90
					Check Total:	2,298.70
20316	06/28/2016	PARKS and RECREATION	Administrative Supplies	Staples Credit Plan		17.78
20316	06/28/2016	PARKS and RECREATION	Administrative Supplies	Staples Credit Plan		28.98
20316	06/28/2016	PARKS and RECREATION	Administrative Supplies	Staples Credit Plan		246.75
					Check Total:	293.51
20317	06/28/2016	PARKS and RECREATION	Community Ctr Janitorial&Maint	Swanson's Pest Mgt		33.00
20317	06/28/2016	GENERAL FUND	Bldg Maint/Janitorial Sup	Swanson's Pest Mgt		31.20
20317	06/28/2016	PLANNING FUND	City Hall Maint/Janitorial Sup	Swanson's Pest Mgt		7.80

Check Number	Check Date	Fund Name	Account Name	Vendor Name		Amount
					Check Total:	72.00
20318	06/28/2016	GENERAL FUND	Bail Payable	Cristine Wiedenbeck		40.00
					Check Total:	40.00
					Report Total:	34,891.15

Accounts Payable
Checks for Approval

User: mindy
Printed: 07/20/2016 - 6:57 AM

Check Number	Check Date	Fund Name	Account Name	Vendor Name		Amount
20319	07/01/2016	GENERAL FUND	W/C and FICA Benefits	SAIF Corporation		954.20
20319	07/01/2016	GENERAL FUND	W/C and FICA Benefits	SAIF Corporation		116.53
20319	07/01/2016	PARKS and RECREATION	W/C and FICA Benefits	SAIF Corporation		895.27
20319	07/01/2016	STREET FUND	W/C and FICA Benefits	SAIF Corporation		1,241.39
20319	07/01/2016	WATER FUND	W/C and FICA Benefits	SAIF Corporation		2,375.02
20319	07/01/2016	SEWER FUND	W/C and FICA Benefits	SAIF Corporation		2,602.82
20319	07/01/2016	STORMWATER DRAINAGE	W/C and FICA Benefits	SAIF Corporation		227.14
20319	07/01/2016	PLANNING FUND	W/C and FICA Benefits	SAIF Corporation		166.92
20319	07/01/2016	PARKS and RECREATION	W/C and FICA Benefits	SAIF Corporation		1,248.71
					Check Total:	9,828.00
20320	07/01/2016	DEBT SERVICE FUND	Pool Bond Interest	U.S. Bank National Association		19,801.95
					Check Total:	19,801.95
					Report Total:	29,629.95

Accounts Payable
Checks for Approval

User: mindy
Printed: 07/20/2016 - 6:59 AM

Check Number	Check Date	Fund Name	Account Name	Vendor Name		Amount
20343	07/06/2016	GENERAL FUND	Bldg Maint/Janitorial Sup	Apex Systems		55.20
20343	07/06/2016	PLANNING FUND	City Hall Maint/Janitorial Sup	Apex Systems		13.80
20343	07/06/2016	WATER FUND	Bldg & Yard Maintenance	Apex Systems		75.00
20343	07/06/2016	SEWER FUND	WW Treatment Plant Maintenance	Apex Systems		75.00
20343	07/06/2016	PARKS and RECREATION	Pool Bldg Janitorial - Maint	Apex Systems		69.00
					Check Total:	288.00
20344	07/06/2016	PARKS and RECREATION	Concession Supplies	Stacy Cornelius		500.00
					Check Total:	500.00
20345	07/06/2016	WATER FUND	Admin Supplies & Services	Dept of Enviromental Quality		980.00
					Check Total:	980.00
20346	07/06/2016	GENERAL FUND	Professional Dues	Lane Council of Govern		322.81
20346	07/06/2016	PARKS and RECREATION	Professional Dues	Lane Council of Govern		37.74
20346	07/06/2016	PLANNING FUND	Professional Dues	Lane Council of Govern		62.29
20346	07/06/2016	WATER FUND	Professional Dues	Lane Council of Govern		487.76
20346	07/06/2016	SEWER FUND	Professional Dues	Lane Council of Govern		547.71
20346	07/06/2016	STREET FUND	Professional Dues	Lane Council of Govern		415.45
20346	07/06/2016	STORMWATER DRAINAGE	Professional Dues	Lane Council of Govern		6.24
					Check Total:	1,880.00
20347	07/06/2016	ZUMWALT CAMPGROUND	Entertainment	Greg Manuck		300.00
					Check Total:	300.00
20348	07/06/2016	GENERAL FUND	Professional Dues	O G F O A		105.00

Check Number	Check Date	Fund Name	Account Name	Vendor Name		Amount
					Check Total:	105.00
20349	07/06/2016	GENERAL FUND	Miscellaneous/Discretionary	OEDA		250.00
					Check Total:	250.00
20350	07/06/2016	GENERAL FUND	Petty Cash	Petty Cash		200.00
					Check Total:	200.00
20351	07/06/2016	ZUMWALT CAMPGROUND	Entertainment	Douglas Sears		300.00
					Check Total:	300.00
					Report Total:	4,803.00

Accounts Payable
Checks for Approval

User: mindy
Printed: 07/20/2016 - 7:01 AM

Check Number	Check Date	Fund Name	Account Name	Vendor Name		Amount
20352	07/13/2016	GENERAL FUND	Janitorial Services Contract	Above The Mess, LLC		459.90
20352	07/13/2016	PLANNING FUND	Janitorial Services Contract	Above The Mess, LLC		114.98
20352	07/13/2016	PARKS and RECREATION	Community Ctr Janitorial&Maint	Above The Mess, LLC		191.62
					Check Total:	766.50
20353	07/13/2016	GENERAL FUND	Computer System Support-Maint	Accela, Inc #774375		3,311.80
20353	07/13/2016	GENERAL FUND	Computer System Support-Maint	Accela, Inc #774375		330.90
20353	07/13/2016	GENERAL FUND	Computer System Support/Maint	Accela, Inc #774375		330.90
20353	07/13/2016	PARKS and RECREATION	Computer System Support-Maint	Accela, Inc #774375		772.90
20353	07/13/2016	PARKS and RECREATION	Computer System Support/Maint	Accela, Inc #774375		330.90
20353	07/13/2016	PLANNING FUND	Computer System Support-Maint	Accela, Inc #774375		1,434.90
20353	07/13/2016	WATER FUND	Computer System Support-Maint	Accela, Inc #774375		1,324.90
20353	07/13/2016	SEWER FUND	Computer System Support-Maint	Accela, Inc #774375		1,986.90
20353	07/13/2016	STREET FUND	Computer System Support-Maint	Accela, Inc #774375		772.90
20353	07/13/2016	STORMWATER DRAINAGE	Computer System Support-Maint	Accela, Inc #774375		441.90
					Check Total:	11,038.90
20354	07/13/2016	GENERAL FUND	Audit & Filing Fees	Accuity, LLC		860.00
20354	07/13/2016	PARKS and RECREATION	Audit & Filing Fees	Accuity, LLC		100.00
20354	07/13/2016	PLANNING FUND	Audit & Filing Fees	Accuity, LLC		165.00
20354	07/13/2016	WATER FUND	Audit & Filing Fees	Accuity, LLC		1,295.00
20354	07/13/2016	SEWER FUND	Audit & Filing Fees	Accuity, LLC		1,455.00
20354	07/13/2016	STREET FUND	Audit & Filing Fees	Accuity, LLC		1,110.00
20354	07/13/2016	STORMWATER DRAINAGE	Audit & Filing Fees	Accuity, LLC		15.00
					Check Total:	5,000.00
20355	07/13/2016	GENERAL FUND	Bldg Maint/Janitorial Sup	ALSCO		214.28
20355	07/13/2016	PLANNING FUND	City Hall Maint/Janitorial Sup	ALSCO		53.57
20355	07/13/2016	GENERAL FUND	Bldg Maint/Janitorial Sup	ALSCO		145.25
20355	07/13/2016	PARKS and RECREATION	Community Ctr Janitorial&Maint	ALSCO		70.30

Check Number	Check Date	Fund Name	Account Name	Vendor Name		Amount
20355	07/13/2016	PARKS and RECREATION	Pool Bldg Janitorial - Maint	ALSCO		780.76
					Check Total:	1,264.16
20356	07/13/2016	SEWER FUND	System Quality Tests	Analytical Laboratory Group		1,263.60
20356	07/13/2016	WATER FUND	System Quality Tests	Analytical Laboratory Group		848.00
					Check Total:	2,111.60
20357	07/13/2016	GENERAL FUND	Recognitions	Banner Bank		34.95
20357	07/13/2016	GENERAL FUND	Computer System Support-Maint	Banner Bank		27.74
20357	07/13/2016	GENERAL FUND	Computer System Support-Maint	Banner Bank		2.86
20357	07/13/2016	GENERAL FUND	Computer System Support/Maint	Banner Bank		2.86
20357	07/13/2016	PARKS and RECREATION	Computer System Support-Maint	Banner Bank		6.87
20357	07/13/2016	PARKS and RECREATION	Computer System Support/Maint	Banner Bank		2.87
20357	07/13/2016	PLANNING FUND	Computer System Support-Maint	Banner Bank		11.86
20357	07/13/2016	WATER FUND	Computer System Support-Maint	Banner Bank		10.86
20357	07/13/2016	SEWER FUND	Computer System Support-Maint	Banner Bank		16.86
20357	07/13/2016	STREET FUND	Computer System Support-Maint	Banner Bank		6.86
20357	07/13/2016	STORMWATER DRAINAGE	Computer System Support-Maint	Banner Bank		3.81
20357	07/13/2016	PARKS and RECREATION	Administrative Supplies	Banner Bank		60.00
20357	07/13/2016	GENERAL FUND	Recognitions	Banner Bank		79.50
					Check Total:	267.90
20358	07/13/2016	GENERAL FUND	Public Relations	Scottie Barnes		204.00
					Check Total:	204.00
20359	07/13/2016	GENERAL FUND	Admin Supplies & Services	Bi-Mart Corporation		18.55
20359	07/13/2016	PLANNING FUND	Admin Services & Supplies	Bi-Mart Corporation		9.99
20359	07/13/2016	SEWER FUND	Safety Programs & Supplies	Bi-Mart Corporation		28.96
20359	07/13/2016	WATER FUND	Admin Supplies & Services	Bi-Mart Corporation		13.17
20359	07/13/2016	SEWER FUND	System Maintenance	Bi-Mart Corporation		13.44
20359	07/13/2016	WATER FUND	System Maintenance	Bi-Mart Corporation		12.56
20359	07/13/2016	PARKS and RECREATION	Vehicle Operation/Maintenance	Bi-Mart Corporation		6.37
20359	07/13/2016	PARKS and RECREATION	Administrative Supplies	Bi-Mart Corporation		135.30
20359	07/13/2016	SEWER FUND	Admin Supplies & Services	Bi-Mart Corporation		13.17
20359	07/13/2016	GENERAL FUND	Admin Supplies & Services	Bi-Mart Corporation		39.94
					Check Total:	291.45
20360	07/13/2016	STREET FUND	Street Rehabilitation	Branch Engineering, Inc		1,473.24
20360	07/13/2016	STREET FUND	Street Rehabilitation	Branch Engineering, Inc		2,258.75

Check Number	Check Date	Fund Name	Account Name	Vendor Name	Amount
20360	07/13/2016	CAPITAL CONST GOV'T	System Expansion	Branch Engineering, Inc	581.63
20360	07/13/2016	STREET FUND	Street System Improvements	Branch Engineering, Inc	5,234.62
20360	07/13/2016	WATER FUND	System Expansion	Branch Engineering, Inc	8,846.25
				Check Total:	18,394.49
20361	07/13/2016	WATER FUND	System Operating Supplies	Brenntag Pacific Inc	-280.00
20361	07/13/2016	WATER FUND	System Operating Supplies	Brenntag Pacific Inc	1,748.40
				Check Total:	1,468.40
20362	07/13/2016	PARKS and RECREATION	Park Maintenance	Buck's Sanitary Service	53.00
20362	07/13/2016	PARKS and RECREATION	Park Maintenance	Buck's Sanitary Service	53.00
20362	07/13/2016	PARKS and RECREATION	Park Maintenance	Buck's Sanitary Service	98.50
				Check Total:	204.50
20363	07/13/2016	GENERAL FUND	Electrical Permit Inspections	The Building Department	1,041.75
20363	07/13/2016	GENERAL FUND	Building Permit Inspections	The Building Department	8,577.98
				Check Total:	9,619.73
20364	07/13/2016	WATER FUND	Telephone Services	CenturyLink Communications, LL	167.59
				Check Total:	167.59
20365	07/13/2016	GENERAL FUND	Computer System Support-Maint	Chaves Consulting Inc	290.40
				Check Total:	290.40
20366	07/13/2016	PARKS and RECREATION	Swim Aide Fees	Riley Chambers	18.00
20366	07/13/2016	PARKS and RECREATION	Swim Aide Fees	Riley Chambers	24.00
				Check Total:	42.00
20367	07/13/2016	GENERAL FUND	General Property/Liability Ins	CIS Trust	9,013.79
20367	07/13/2016	PARKS and RECREATION	General Property/Liability Ins	CIS Trust	1,196.44
20367	07/13/2016	PARKS and RECREATION	General Property/Liability Ins	CIS Trust	2,130.01
20367	07/13/2016	PARKS and RECREATION	General Property/Liability Ins	CIS Trust	184.69
20367	07/13/2016	PLANNING FUND	General Property/Liability Ins	CIS Trust	2,160.05
20367	07/13/2016	WATER FUND	General Property/Liability Ins	CIS Trust	13,374.17
20367	07/13/2016	SEWER FUND	General Property/Liability Ins	CIS Trust	10,918.07
20367	07/13/2016	STREET FUND	General Property/Liability Ins	CIS Trust	7,839.28

Check Number	Check Date	Fund Name	Account Name	Vendor Name		Amount
20367	07/13/2016	STORMWATER DRAINAGE	General Property/Liability Ins	CIS Trust		100.67
					Check Total:	46,917.17
20368	07/13/2016	CAP CONSTRUCTION-SEWER	Other Professional Services	Civil West Engineering Service		5,027.00
20368	07/13/2016	SEWER FUND	Engineering Fees	Civil West Engineering Service		5,513.90
					Check Total:	10,540.90
20369	07/13/2016	GENERAL FUND	Attorney & Legal Services	C & K Market Inc		8.98
					Check Total:	8.98
20370	07/13/2016	PARKS and RECREATION	Travel	Stacy Cornelius		70.53
20370	07/13/2016	PARKS and RECREATION	Pool Events	Stacy Cornelius		51.90
20370	07/13/2016	PARKS and RECREATION	Travel	Stacy Cornelius		173.34
					Check Total:	295.77
20371	07/13/2016	GENERAL FUND	Admin Supplies & Services	DocuTRAK Imaging, Inc		30.00
					Check Total:	30.00
20372	07/13/2016	WATER FUND	Admin Supplies & Services	EDMS Inc		32.59
20372	07/13/2016	WATER FUND	Postage	EDMS Inc		23.78
20372	07/13/2016	SEWER FUND	Admin Supplies & Services	EDMS Inc		48.89
20372	07/13/2016	SEWER FUND	Postage	EDMS Inc		35.67
20372	07/13/2016	GENERAL FUND	Public Relations	EDMS Inc		833.46
20372	07/13/2016	WATER FUND	Admin Supplies & Services	EDMS Inc		139.28
20372	07/13/2016	WATER FUND	Postage	EDMS Inc		248.27
20372	07/13/2016	SEWER FUND	Admin Supplies & Services	EDMS Inc		208.93
20372	07/13/2016	SEWER FUND	Postage	EDMS Inc		372.41
					Check Total:	1,943.28
20373	07/13/2016	ZUMWALT CAMPGROUND	Security	Elite Security Services, LLC		10,132.00
					Check Total:	10,132.00
20374	07/13/2016	SEWER FUND	WW Treatment Plant Maintenance	Endress Hauser Inc		333.97
					Check Total:	333.97

Check Number	Check Date	Fund Name	Account Name	Vendor Name		Amount
20375	07/13/2016	PARKS and RECREATION	Territorial Park Electricity	EPUD		24.05
20375	07/13/2016	PARKS and RECREATION	Pool Utilities	EPUD		844.42
20375	07/13/2016	WATER FUND	Electricity	EPUD		25.85
20375	07/13/2016	GENERAL FUND	Electricity	EPUD		320.56
20375	07/13/2016	PLANNING FUND	Electricity	EPUD		80.14
20375	07/13/2016	SEWER FUND	Electricity	EPUD		73.76
20375	07/13/2016	SEWER FUND	Electricity	EPUD		68.90
20375	07/13/2016	STREET FUND	Electricity-Street Lights	EPUD		2,546.35
20375	07/13/2016	WATER FUND	Electricity	EPUD		23.62
20375	07/13/2016	WATER FUND	Electricity	EPUD		2,844.52
					Check Total:	6,852.17
20376	07/13/2016	PARKS and RECREATION	Training & Conferences	Eugene Family YMCA		700.00
					Check Total:	700.00
20377	07/13/2016	WATER FUND	Water Purchase	Eugene Water & Electric Board		5,408.76
20377	07/13/2016	WATER FUND	Water Purchase	Eugene Water & Electric Board		4,502.42
					Check Total:	9,911.18
20378	07/13/2016	PARKS and RECREATION	Swim Aide Fees	Gabe Fatooh		24.00
20378	07/13/2016	PARKS and RECREATION	Swim Aide Fees	Gabe Fatooh		56.00
					Check Total:	80.00
20379	07/13/2016	WATER FUND	System Maintenance	FEI #3011 Waterworks		75.18
20379	07/13/2016	WATER FUND	System Maintenance	FEI #3011 Waterworks		283.53
20379	07/13/2016	WATER FUND	System Maintenance	FEI #3011 Waterworks		189.00
					Check Total:	547.71
20380	07/13/2016	ZUMWALT CAMPGROUND	Volunteer Costs	Figaro's Pizza		253.50
					Check Total:	253.50
20381	07/13/2016	GENERAL FUND	Accounts Payable	Fern Ridge School District 28J		5,570.53
					Check Total:	5,570.53
20382	07/13/2016	PARKS and RECREATION	Refunds	Rebecca Gaskin		50.00

Check Number	Check Date	Fund Name	Account Name	Vendor Name		Amount
					Check Total:	50.00
20383	07/13/2016	WATER FUND	System Maintenance	HD Fowler Company		84.49
20383	07/13/2016	WATER FUND	System Maintenance	HD Fowler Company		5.48
					Check Total:	89.97
20384	07/13/2016	GENERAL FUND	Professional Dues	Internation Institute of Munic		26.62
20384	07/13/2016	PARKS and RECREATION	Professional Dues	Internation Institute of Munic		3.11
20384	07/13/2016	PLANNING FUND	Professional Dues	Internation Institute of Munic		5.14
20384	07/13/2016	WATER FUND	Professional Dues	Internation Institute of Munic		40.21
20384	07/13/2016	SEWER FUND	Professional Dues	Internation Institute of Munic		45.16
20384	07/13/2016	STREET FUND	Professional Dues	Internation Institute of Munic		34.25
20384	07/13/2016	STORMWATER DRAINAGE	Professional Dues	Internation Institute of Munic		0.51
					Check Total:	155.00
20385	07/13/2016	PARKS and RECREATION	Pool Operating Supplies	Industrial Source		241.50
20385	07/13/2016	PARKS and RECREATION	Pool Maintenance	Industrial Source		377.10
20385	07/13/2016	PARKS and RECREATION	Pool Maintenance	Industrial Source		-135.60
20385	07/13/2016	PARKS and RECREATION	Pool Maintenance	Industrial Source		-109.10
					Check Total:	373.90
20386	07/13/2016	PARKS and RECREATION	Pool Utilities	Info Structure		149.57
20386	07/13/2016	SEWER FUND	Telephone Services	Info Structure		45.81
20386	07/13/2016	GENERAL FUND	Telephone Services	Info Structure		400.04
20386	07/13/2016	PLANNING FUND	Telephone	Info Structure		100.01
					Check Total:	695.43
20387	07/13/2016	GENERAL FUND	Travel - Staff	R Ric Ingham		21.05
20387	07/13/2016	GENERAL FUND	Travel - Staff	R Ric Ingham		2.10
20387	07/13/2016	PARKS and RECREATION	Travel	R Ric Ingham		4.21
20387	07/13/2016	PLANNING FUND	Travel - Staff	R Ric Ingham		10.52
20387	07/13/2016	WATER FUND	Travel	R Ric Ingham		4.21
20387	07/13/2016	SEWER FUND	Travel	R Ric Ingham		21.05
20387	07/13/2016	PARKS and RECREATION	Travel	R Ric Ingham		2.10
20387	07/13/2016	STREET FUND	Travel	R Ric Ingham		16.84
20387	07/13/2016	STORMWATER DRAINAGE	Travel	R Ric Ingham		2.10

Check Number	Check Date	Fund Name	Account Name	Vendor Name		Amount
					Check Total:	84.18
20388	07/13/2016	GENERAL FUND	Travel - Staff	Jerry Brown Co		65.61
20388	07/13/2016	PARKS and RECREATION	Vehicle Operation/Maintenance	Jerry Brown Co		131.20
20388	07/13/2016	STREET FUND	Vehicle Operation-Maintenance	Jerry Brown Co		131.20
20388	07/13/2016	WATER FUND	Vehicle Operation&Maintenance	Jerry Brown Co		524.80
20388	07/13/2016	SEWER FUND	Vehicle Operation&Maintenance	Jerry Brown Co		459.20
					Check Total:	1,312.01
20389	07/13/2016	PARKS and RECREATION	Refunds-Pool	Nicole Kelley		76.00
					Check Total:	76.00
20390	07/13/2016	GENERAL FUND	County Fine Assessment Payable	Lane Co Accts Receivable		898.29
					Check Total:	898.29
20391	07/13/2016	PLANNING FUND	Admin Services & Supplies	Lane County Deeds & Records		62.00
20391	07/13/2016	PLANNING FUND	Admin Services & Supplies	Lane County Deeds & Records		42.00
					Check Total:	104.00
20392	07/13/2016	LAW ENFORCEMENT FUND	Law Enforcement Contract	Lane County Sheriff's Ofc		210,843.75
					Check Total:	210,843.75
20393	07/13/2016	STREET FUND	Admin Supplies & Services	Lane County Waste Management		4.00
					Check Total:	4.00
20394	07/13/2016	STREET FUND	Electricity-Street Lights	Lane Electric Coop Inc		1,362.01
20394	07/13/2016	PARKS and RECREATION	Electricity-Community Center	Lane Electric Coop Inc		77.28
20394	07/13/2016	GENERAL FUND	Welcome Sign Maintenance	Lane Electric Coop Inc		136.17
20394	07/13/2016	SEWER FUND	Electricity	Lane Electric Coop Inc		4,290.24
20394	07/13/2016	WATER FUND	Electricity	Lane Electric Coop Inc		207.13
20394	07/13/2016	WATER FUND	Electricity	Lane Electric Coop Inc		983.23
					Check Total:	7,056.06
20395	07/13/2016	SEWER FUND	WW Treatment Plant Maintenance	Manning Environmental Inc		115.17

Check Number	Check Date	Fund Name	Account Name	Vendor Name		Amount
					Check Total:	115.17
20396	07/13/2016	STREET FUND	Street Sweeping Contract	Mid-State Industrial Svc		1,830.00
					Check Total:	1,830.00
20397	07/13/2016	GENERAL FUND	Admin Supplies & Services	Net Assets		345.00
					Check Total:	345.00
20398	07/13/2016	ZUMWALT CAMPGROUND	Portable Showers	No Drought Potable Water Servi		2,237.50
20398	07/13/2016	ZUMWALT CAMPGROUND	Water Tanker	No Drought Potable Water Servi		737.50
					Check Total:	2,975.00
20399	07/13/2016	GENERAL FUND	State Fine Assessments Payable	ODOR - Court		533.93
					Check Total:	533.93
20400	07/13/2016	STREET FUND	Equipment Repairs	O'Reilly Automotive, Inc		4.99
20400	07/13/2016	PARKS and RECREATION	Equipment Repairs	O'Reilly Automotive, Inc		5.00
20400	07/13/2016	PARKS and RECREATION	Equipment Repairs	O'Reilly Automotive, Inc		2.00
20400	07/13/2016	STREET FUND	Equipment Repairs	O'Reilly Automotive, Inc		1.99
20400	07/13/2016	PARKS and RECREATION	Vehicle Operation/Maintenance	O'Reilly Automotive, Inc		13.49
20400	07/13/2016	STREET FUND	Vehicle Operation-Maintenance	O'Reilly Automotive, Inc		13.49
20400	07/13/2016	STREET FUND	Tools & Small Equipment	O'Reilly Automotive, Inc		-19.99
20400	07/13/2016	WATER FUND	System Operating Supplies	O'Reilly Automotive, Inc		11.49
20400	07/13/2016	PARKS and RECREATION	Vehicle Operation/Maintenance	O'Reilly Automotive, Inc		95.48
20400	07/13/2016	PARKS and RECREATION	Vehicle Operation/Maintenance	O'Reilly Automotive, Inc		17.53
20400	07/13/2016	STREET FUND	Vehicle Operation-Maintenance	O'Reilly Automotive, Inc		17.53
					Check Total:	163.00
20401	07/13/2016	GENERAL FUND	Training & Travel-Officials	Oregon Mayors Assoc		465.00
					Check Total:	465.00
20402	07/13/2016	SEWER FUND	WW Treatment Plant Maintenance	Oregon Water Services		185.00
					Check Total:	185.00
20403	07/13/2016	PARKS and RECREATION	Swim Aide Fees	Paul Ossowski		24.00

Check Number	Check Date	Fund Name	Account Name	Vendor Name		Amount
20403	07/13/2016	PARKS and RECREATION	Swim Aide Fees	Paul Ossowski		44.00
					Check Total:	68.00
20404	07/13/2016	WATER FUND	Tools & Small Equipment	Pacific Rubber & Supply		46.88
					Check Total:	46.88
20405	07/13/2016	GENERAL FUND	Office Machine Leases	Pitney Bowes		33.70
20405	07/13/2016	PLANNING FUND	Office Machine Lease	Pitney Bowes		5.80
20405	07/13/2016	GENERAL FUND	Office Machine Leases	Pitney Bowes		14.15
20405	07/13/2016	GENERAL FUND	Office Machine Leases	Pitney Bowes		21.79
20405	07/13/2016	PARKS and RECREATION	Office Machine Leases	Pitney Bowes		0.95
20405	07/13/2016	WATER FUND	Office Machine Leases	Pitney Bowes		141.07
20405	07/13/2016	SEWER FUND	Office Machine Leases	Pitney Bowes		155.14
					Check Total:	372.60
20406	07/13/2016	ZUMWALT CAMPGROUND	Wristbands for Campers	Precision Dynamics Corp		209.85
					Check Total:	209.85
20407	07/13/2016	GENERAL FUND	Bldg Maint/Janitorial Sup	SANIPAC		24.04
20407	07/13/2016	PLANNING FUND	City Hall Maint/Janitorial Sup	SANIPAC		6.01
20407	07/13/2016	SEWER FUND	WW Treatment Plant Maintenance	SANIPAC		103.95
20407	07/13/2016	WATER FUND	Bldg & Yard Maintenance	SANIPAC		123.43
					Check Total:	257.43
20408	07/13/2016	GENERAL FUND	Refunds	Jonathan & Ann Seay		47.00
					Check Total:	47.00
20409	07/13/2016	ZUMWALT CAMPGROUND	Admin Supplies & Services	Signature Signs Inc		297.00
					Check Total:	297.00
20410	07/13/2016	PARKS and RECREATION	Refunds-Pool	Maggie Smith		19.58
					Check Total:	19.58
20411	07/13/2016	GENERAL FUND	Telephone Services	Nextel Communications		39.82
20411	07/13/2016	PARKS and RECREATION	Telephone Services	Nextel Communications		39.82

Check Number	Check Date	Fund Name	Account Name	Vendor Name	Amount
20411	07/13/2016	WATER FUND	Telephone Services	Nextel Communications	59.73
20411	07/13/2016	SEWER FUND	Telephone Services	Nextel Communications	59.73
20411	07/13/2016	STREET FUND	Telephone Services	Nextel Communications	39.81
				Check Total:	238.91
20412	07/13/2016	PARKS and RECREATION	Pool Fuel	Suburban Propane	250.00
20412	07/13/2016	PARKS and RECREATION	Pool Fuel	Suburban Propane	1,778.51
				Check Total:	2,028.51
20413	07/13/2016	PARKS and RECREATION	Equipment Repairs	Sunset Auto Parts, Inc	12.11
20413	07/13/2016	STREET FUND	Equipment Repairs	Sunset Auto Parts, Inc	12.11
20413	07/13/2016	PARKS and RECREATION	Equipment Repairs	Sunset Auto Parts, Inc	9.79
20413	07/13/2016	STREET FUND	Equipment Repairs	Sunset Auto Parts, Inc	9.80
20413	07/13/2016	WATER FUND	Bldg & Yard Maintenance	Sunset Auto Parts, Inc	5.66
20413	07/13/2016	SEWER FUND	Bldg & Yard Maintenance	Sunset Auto Parts, Inc	5.66
20413	07/13/2016	STREET FUND	Bldg & Yard Maintenance	Sunset Auto Parts, Inc	5.65
				Check Total:	60.78
20414	07/13/2016	CAPITAL CONST GOV'T	System Expansion	Thermo Imaging & Analysis, LLC	17.50
20414	07/13/2016	STREET FUND	Street System Improvements	Thermo Imaging & Analysis, LLC	157.50
				Check Total:	175.00
20415	07/13/2016	PARKS and RECREATION	Professional Dues	Travel Lane County	4.32
20415	07/13/2016	PLANNING FUND	Professional Dues	Travel Lane County	7.12
20415	07/13/2016	WATER FUND	Professional Dues	Travel Lane County	55.78
20415	07/13/2016	SEWER FUND	Professional Dues	Travel Lane County	62.64
20415	07/13/2016	STREET FUND	Professional Dues	Travel Lane County	47.51
20415	07/13/2016	STORMWATER DRAINAGE	Professional Dues	Travel Lane County	0.71
20415	07/13/2016	GENERAL FUND	Professional Dues	Travel Lane County	36.92
				Check Total:	215.00
20416	07/13/2016	SEWER FUND	WW Treatment Plant Maintenance	United Rentals Northwest, Inc.	274.91
20416	07/13/2016	SEWER FUND	WW Treatment Plant Maintenance	United Rentals Northwest, Inc.	144.00
				Check Total:	418.91
20417	07/13/2016	GENERAL FUND	RARE Student Program	University of Oregon	11,000.00
20417	07/13/2016	GENERAL FUND	RARE Student Program	University of Oregon	5,500.00

Check Number	Check Date	Fund Name	Account Name	Vendor Name		Amount
					Check Total:	16,500.00
20418	07/13/2016	PARKS and RECREATION	Park Maintenance	Veneta Ace Hardware		9.60
20418	07/13/2016	SEWER FUND	Tools & Small Equipment	Veneta Ace Hardware		15.76
20418	07/13/2016	GENERAL FUND	Bldg Maint/Janitorial Sup	Veneta Ace Hardware		3.20
20418	07/13/2016	PLANNING FUND	City Hall Maint/Janitorial Sup	Veneta Ace Hardware		0.79
20418	07/13/2016	WATER FUND	Admin Supplies & Services	Veneta Ace Hardware		2.00
20418	07/13/2016	SEWER FUND	Admin Supplies & Services	Veneta Ace Hardware		2.00
20418	07/13/2016	STREET FUND	Admin Supplies & Services	Veneta Ace Hardware		1.99
20418	07/13/2016	PARKS and RECREATION	Park Maintenance	Veneta Ace Hardware		2.59
20418	07/13/2016	WATER FUND	Bldg & Yard Maintenance	Veneta Ace Hardware		85.48
20418	07/13/2016	PARKS and RECREATION	Equipment Repairs	Veneta Ace Hardware		4.80
20418	07/13/2016	STREET FUND	Equipment Repairs	Veneta Ace Hardware		4.79
20418	07/13/2016	PARKS and RECREATION	Equipment Repairs	Veneta Ace Hardware		2.06
20418	07/13/2016	STREET FUND	Equipment Repairs	Veneta Ace Hardware		2.05
20418	07/13/2016	PARKS and RECREATION	Pool Operating Supplies	Veneta Ace Hardware		5.99
20418	07/13/2016	PARKS and RECREATION	Admin Supplies & Services	Veneta Ace Hardware		9.98
20418	07/13/2016	SEWER FUND	System Maintenance	Veneta Ace Hardware		6.99
20418	07/13/2016	WATER FUND	System Operating Supplies	Veneta Ace Hardware		8.49
20418	07/13/2016	PARKS and RECREATION	Equipment Repairs	Veneta Ace Hardware		13.04
20418	07/13/2016	STREET FUND	Equipment Repairs	Veneta Ace Hardware		13.04
20418	07/13/2016	SEWER FUND	Tools & Small Equipment	Veneta Ace Hardware		21.19
20418	07/13/2016	PARKS and RECREATION	Pool Maintenance	Veneta Ace Hardware		4.99
20418	07/13/2016	PARKS and RECREATION	Park Maintenance	Veneta Ace Hardware		19.98
20418	07/13/2016	SEWER FUND	Tools & Small Equipment	Veneta Ace Hardware		13.80
20418	07/13/2016	PARKS and RECREATION	Pool Maintenance	Veneta Ace Hardware		1.48
					Check Total:	256.08
20419	07/13/2016	SEWER FUND	WW Treatment Plant Maintenance	Wildish Sand & Gravel		165.28
20419	07/13/2016	STREET FUND	Street Maintenance	Wildish Sand & Gravel		165.28
					Check Total:	330.56
20420	07/13/2016	SEWER FUND	WW Treatment Plant Maintenance	Xylem, Inc		1,559.17
					Check Total:	1,559.17

Check Number	Check Date	Fund Name	Account Name	Vendor Name	Amount
				Report Total:	396,704.73

Accounts Payable
Checks for Approval

User: mindy
Printed: 07/20/2016 - 7:03 AM

Check Number	Check Date	Fund Name	Account Name	Vendor Name		Amount
20443	07/14/2016	GENERAL FUND	Telephone Services	R Ric Ingham		75.00
					Check Total:	75.00
20444	07/14/2016	SEWER FUND	Telephone Services	Kip Orme		50.00
					Check Total:	50.00
20445	07/14/2016	WATER FUND	Telephone Services	Kyle Schauer		50.00
20445	07/14/2016	SEWER FUND	Travel	Kyle Schauer		23.07
20445	07/14/2016	GENERAL FUND	Recognitions	Kyle Schauer		145.95
					Check Total:	219.02
					Report Total:	344.02

Accounts Payable
To Be Paid Proof List

User: mindy
Printed: 07/20/2016 - 7:21 AM
Batch: 008-06-2016

Invoice #	Inv Date	Amount	Quantity	Pmt Date	Description	Reference	Task	Type	PO #	Close PO	Line #
ASI ASI											
A14656606JKU	06/30/2016	3.75	0.00	07/26/2016	FSA admin fee		-			No	0000
100-100-51010	Admin Supplies & Services										
	A14656606JKU Total:	3.75									
	ASI Total:	3.75									
CivWest Civil West Engineering Service											
3101-001-03.02	06/27/2016	335.00	0.00	07/26/2016	Wastewater - General Services		-			No	0000
220-220-52070	Engineering Fees										
	3101-001-03.02 Total:	335.00									
	CivWest Total:	335.00									
Ferg3021 FEI #3011 Waterworks											
525001-1	07/12/2016	2,557.50	0.00	07/26/2016	System needs B/O from PO 4952		-			No	0000
210-210-53040	System Maintenance										
	525001-1 Total:	2,557.50									
526449-1	07/06/2016	4.02	0.00	07/26/2016	System needs B/O from PO 4959		-			No	0000
210-210-53040	System Maintenance										
	526449-1 Total:	4.02									
	Ferg3021 Total:	2,561.52									
KnorSyst Knorr Systems, Inc											
181315	06/30/2016	583.20	0.00	07/26/2016	Controllers x 2		-			No	0000
130-520-54040	Pool Maintenance										
	181315 Total:	583.20									
	KnorSyst Total:	583.20									
LanCouOf Lane Council of Govern											
62802	06/30/2016	1,025.03	0.00	07/26/2016	Computer support 4th Qtr FY1516		-			No	0000
100-100-52045	Computer System Support-Maint										

Invoice #	Inv Date	Amount	Quantity	Pmt Date	Description	Reference	Task	Type	PO #	Close	PO Line #
62802	06/30/2016	102.50	0.00	07/26/2016	Computer support 4th Qtr FY1516		-			No	0000
100-160-52045	Computer System Support-Maint										
62802	06/30/2016	102.50	0.00	07/26/2016	Computer support 4th Qtr FY1516		-			No	0000
100-170-52045	Computer System Support/Maint										
62802	06/30/2016	239.18	0.00	07/26/2016	Computer support 4th Qtr FY1516		-			No	0000
130-130-52045	Computer System Support-Maint										
62802	06/30/2016	102.50	0.00	07/26/2016	Computer support 4th Qtr FY1516		-			No	0000
130-520-52045	Computer System Support/Maint										
62802	06/30/2016	444.18	0.00	07/26/2016	Computer support 4th Qtr FY1516		-			No	0000
140-140-52045	Computer System Support-Maint										
62802	06/30/2016	410.01	0.00	07/26/2016	Computer support 4th Qtr FY1516		-			No	0000
210-210-52045	Computer System Support-Maint										
62802	06/30/2016	615.02	0.00	07/26/2016	Computer support 4th Qtr FY1516		-			No	0000
220-220-52045	Computer System Support-Maint										
62802	06/30/2016	239.18	0.00	07/26/2016	Computer support 4th Qtr FY1516		-			No	0000
230-230-52045	Computer System Support-Maint										
62802	06/30/2016	136.69	0.00	07/26/2016	Computer support 4th Qtr FY1516		-			No	0000
240-240-52045	Computer System Support-Maint										
	62802 Total:	3,416.79									
	LanCouOf Total:	3,416.79									
MidSta Mid-State Industrial Svc											
164621	05/19/2016	1,830.00	0.00	07/15/2016	Monthly Contract		-			No	0000
230-230-53150	Street Sweeping Contract										
	164621 Total:	1,830.00									
	MidSta Total:	1,830.00									
SanMin Sandford Mindy S											
MSandford 6/16	06/14/2016	12.42	0.00	07/26/2016	Mileage Reimbursement		-			No	0000
350-350-51010	Admin Supplies & Services										
	MSandford 6/16 Total:	12.42									
	SanMin Total:	12.42									
SpeHoy Speer Hoyt LLC											
35896	06/30/2016	1,211.88	0.00	07/26/2016	Legal Services		-			No	0000
100-100-52010	Attorney & Legal Services										
	35896 Total:	1,211.88									
35897	06/30/2016	597.30	0.00	07/26/2016	Legal Services		-			No	0000
100-100-52010	Attorney & Legal Services										
35897	06/30/2016	336.66	0.00	07/26/2016	Legal Services		-			No	0000
210-210-52010	Attorney & Legal Services										
35897	06/30/2016	224.44	0.00	07/26/2016	Legal Services		-			No	0000
220-220-52010	Attorney & Legal Services										

Invoice #	Inv Date	Amount	Quantity	Pmt Date	Description	Reference	Task	Type	PO #	Close	POLine #
	35897 Total:	1,158.40									
35898	06/30/2016	18.10	0.00	07/26/2016	Legal Services		-			No	0000
100-160-52010	Attorney & Legal Services										
	35898 Total:	18.10									
35899	06/30/2016	506.80	0.00	07/26/2016	Legal Services		-			No	0000
140-140-52010	Attorney & Legal Services										
	35899 Total:	506.80									
	SpeHoy Total:	2,895.18									
	Report Total:	11,637.86									

Accounts Payable
To Be Paid Proof List

User: mindy
Printed: 07/20/2016 - 7:39 AM
Batch: 006-07-2016

Invoice #	Inv Date	Amount	Quantity	Pmt Date	Description	Reference	Task	Type	PO #	Close	POLine #
BrenPac Brenntag Pacific Inc											
241828	07/12/2016	-240.00	0.00	07/26/2016	Container Deposit credit		-			No	0000
220-220-53020	System Operating Supplies										
	241828 Total:	-240.00									
640108	07/06/2016	2,384.05	0.00	07/26/2016	System Chemicals PO 4779		-			No	0000
220-220-53020	System Operating Supplies										
	640108 Total:	2,384.05									
	BrenPac Total:	2,144.05									
CodePub Code Publishing											
53748	07/15/2016	825.20	0.00	07/26/2016	Veneta Municipal Code PO 4679		-			No	0000
100-100-52290	Other Professional Services										
	53748 Total:	825.20									
	CodePub Total:	825.20									
DocuTrak DocuTRAK Imaging, Inc											
6347	07/19/2016	30.00	0.00	07/26/2016	On site shredding service		-			No	0000
100-100-51010	Admin Supplies & Services										
	6347 Total:	30.00									
	DocuTrak Total:	30.00									
EDMS EDMS Inc											
80557	07/15/2016	22.54	0.00	07/26/2016	Past Due Notices July 2016		-			No	0000
210-210-51010	Admin Supplies & Services										
80557	07/15/2016	30.64	0.00	07/26/2016	Past Due Notices July 2016		-			No	0000
210-210-51015	Postage										
80557	07/15/2016	33.82	0.00	07/26/2016	Past Due Notices July 2016		-			No	0000
220-220-51010	Admin Supplies & Services										
80557	07/15/2016	45.97	0.00	07/26/2016	Past Due Notices July 2016		-			No	0000
220-220-51015	Postage										
	80557 Total:	132.97									

Invoice #	Inv Date	Amount	Quantity	Pmt Date	Description	Reference	Task	Type	PO #	Close	POLine #
	EDMS Total:	132.97									
HeidDon Heidtke Donna											
HeidtkeDonna	07/14/2016	50.00	0.00	07/26/2016	C. Center rental refund		-			No	0000
130-130-51105	Refunds										
	HeidtkeDonna Total:	50.00									
	HeidDon Total:	50.00									
HuntComm Hunter Communications, Inc											
08/2016	07/15/2016	91.48	0.00	07/26/2016	Fiber Internet Service		-			No	0000
100-100-52050	Internet & Web Site Fees										
08/2016	07/15/2016	30.50	0.00	07/26/2016	Fiber Internet Service		-			No	0000
140-140-52050	Internet & Web Site Fees										
08/2016	07/15/2016	121.98	0.00	07/26/2016	Fiber Internet Service		-			No	0000
210-210-52050	Internet & Web Site Fees										
08/2016	07/15/2016	60.99	0.00	07/26/2016	Fiber Internet Service		-			No	0000
220-220-52050	Internet & Web Site Fees										
08/2016	07/15/2016	20.00	0.00	07/26/2016	Fiber Internet Service		-			No	0000
120-120-51030	Telephone Services										
	08/2016 Total:	324.95									
	HuntComm Total:	324.95									
JohYar John's Yard Care											
15423	07/13/2016	245.00	0.00	07/26/2016	Mow and Weed Eat 25106 E Bolton PO 5017		-			No	0000
100-170-52085	Ordinance Enforcement Services										
	15423 Total:	245.00									
	JohYar Total:	245.00									
LeaOfOr League of Oregon Cities											
17902	07/13/2016	638.37	0.00	07/26/2016	Annual Membership for FY 2016-17		-			No	0000
100-100-51020	Professional Dues										
17902	07/13/2016	74.63	0.00	07/26/2016	Annual Membership for FY 2016-17		-			No	0000
130-130-51020	Professional Dues										
17902	07/13/2016	123.18	0.00	07/26/2016	Annual Membership for FY 2016-17		-			No	0000
140-140-51020	Professional Dues										
17902	07/13/2016	964.54	0.00	07/26/2016	Annual Membership for FY 2016-17		-			No	0000
210-210-51020	Professional Dues										
17902	07/13/2016	1,083.09	0.00	07/26/2016	Annual Membership for FY 2016-17		-			No	0000
220-220-51020	Professional Dues										
17902	07/13/2016	821.55	0.00	07/26/2016	Annual Membership for FY 2016-17		-			No	0000
230-230-51020	Professional Dues										

Invoice #	Inv Date	Amount	Quantity	Pmt Date	Description	Reference	Task	Type	PO #	Close PO	Line #
17902	07/13/2016	12.34	0.00	07/26/2016	Annual Membership for FY 2016-17		-			No	0000
240-240-51020	Professional Dues										
	17902 Total:	3,717.70									
	LeaOfOr Total:	3,717.70									
MaccRos Maccauley Ross											
22022053130	07/18/2016	19.30	0.00	07/26/2016	Fuel Pump PO 4987		-			No	0000
220-220-53130	Equipment Repairs										
	22022053130 Total:	19.30									
	MaccRos Total:	19.30									
McGBear McGuire Bearing Co.											
2869326-00	07/14/2016	76.12	0.00	07/26/2016	System Needs PO 4899		-			No	0000
220-220-53130	Equipment Repairs										
	2869326-00 Total:	76.12									
	McGBear Total:	76.12									
ORCode Oregon Code Enforcement Assoc.											
July 2016	07/13/2016	75.00	0.00	07/26/2016	Membership renewal 2016-2017		-			No	0000
100-170-51070	Training & Conferences										
	July 2016 Total:	75.00									
	ORCode Total:	75.00									
SanMin Sandford Mindy S											
MSandford 7/16	07/14/2016	12.42	0.00	07/26/2016	Mileage Reimbursement		-			No	0000
350-350-51010	Admin Supplies & Services										
	MSandford 7/16 Total:	12.42									
	SanMin Total:	12.42									
SupWorks Supplyworks											
372041905	07/13/2016	28.76	0.00	07/26/2016	Lifter Wipes PO 5018		-			No	0000
220-220-53040	System Maintenance										
	372041905 Total:	28.76									
372327726	07/13/2016	198.10	0.00	07/26/2016	Doggy bags PO4984		-			No	0000
130-130-53210	Park Maintenance										
	372327726 Total:	198.10									
	SupWorks Total:	226.86									

Invoice #	Inv Date	Amount	Quantity	Pmt Date	Description	Reference	Task	Type	PO #	Close	POLine #
SwaPes Swanson's Pest Mgt											
July 2016	07/07/2016	31.20	0.00	07/26/2016	CH pest management		-			No	0000
100-100-51050	Bldg Maint/Janitorial Sup										
July 2016	07/07/2016	7.80	0.00	07/26/2016	CH pest management		-			No	0000
140-140-51050	City Hall Maint/Janitorial Sup										
July 2016	07/07/2016	33.00	0.00	07/26/2016	Community Ctr pest management		-			No	0000
130-530-52055	Community Ctr Janitorial&Maint										
July 2016	07/07/2016	16.17	0.00	07/26/2016	PWD shops / Water Trmnt Plant		-			No	0000
210-210-53065	Bldg & Yard Maintenance										
July 2016	07/07/2016	16.66	0.00	07/26/2016	PWD shops / Water Trmnt Plant		-			No	0000
220-220-53065	Bldg & Yard Maintenance										
July 2016	07/07/2016	16.17	0.00	07/26/2016	PWD shops / Water Trmnt Plant		-			No	0000
230-230-53065	Bldg & Yard Maintenance										
	July 2016 Total:	121.00									
	SwaPes Total:	121.00									
UniRen United Rentals Northwest, Inc.											
138705965-001	07/12/2016	957.32	0.00	07/26/2016	Utiltiy vehicle rentals		-			No	0000
350-350-54465	Cart & Light Tower Rentals										
	138705965-001 Total:	957.32									
138705965-002	07/12/2016	453.34	0.00	07/26/2016	Light Tower Rental		-			No	0000
350-350-54465	Cart & Light Tower Rentals										
	138705965-002 Total:	453.34									
	UniRen Total:	1,410.66									
	Report Total:	9,411.23									

CITY OF VENETA - CIVIC CALENDAR - AUGUST 2016 Veneta Administrative Center - 88184 8th Street, Veneta, Oregon		
2	Veneta Planning Commission Meeting - City Hall	6:30 p.m.
3	Veneta Park Board Meeting - City Hall	4:30 p.m.
8	Veneta City Council Meeting Veneta Urban Renewal Agency Meeting - Immediately following City Council Meeting	6:30 p.m.
10	Veneta Economic Development Committee Meeting - City Hall	2:00 p.m.
18	Municipal Court - City Hall	8:30 a.m.
22	Veneta City Council Meeting - City Hall	Cancelled
27	Meet Sgt. Halvorson (Lane County Sheriff's Office contract Sergeant for the City of Veneta) - Fern Ridge Library	1:00 p.m.
	Calendar updates will be posted on the City's website at www.venetaoregon.gov This Civic Calendar was sent to: Fern Ridge Review, Fern Ridge School District 28J, Fern Ridge Public Library, and Lane Fire Authority	

VENETA oregon Inc 1962

Banner Permit

RECEIVED JUN 10 2016 CITY OF VENETA

PO Box 458 * Veneta, OR 97487 * 541-935-2191 * Fax 541-935-1838 * www.venetaoregon.gov

This form must be submitted to Veneta City Hall no later than three weeks prior to the date requested. Applications will be processed on a first come, first serve basis. All banners are subject to appropriate jurisdictional approval. Banners are only allowed for the following entities: governmental entities, special district organizations, non-profit organizations. Banners shall be permitted to promote only the following activities: public service activity which provides benefits to the community as a whole; artistic or literary activities, provided that artistic shall include music and the performing arts; scholastic activities which are defined as activities sponsored by organizations which carry on general education activities. Banners may display the name, slogan, advertising, logo or trademark of any sponsor of the activity. Banners shall not be permitted to advertise the following: promote or be sponsored by any political candidate/party, religious, issue group, or be carried on for the purpose of earning a profit.

1. Organization Information
   Entity: Kiwanis Club of Fern Ridge
   Purpose: 2016 Motorcycle Show "N" Shine
   Contact Person: Ric Ingham
   Phone Number: 541-935-2191
   Email: ringham@ci.veneta.or.us

2. Permit Information
   Event Date 8-21-2016
   Requested time period for banner display: Start Date 8-8-2016 End Date 8-23-2016
   Requested banner location:

   ☒ Luther Ln (Lane Electric Cooperative)

   ☐ Territorial Hwy (Emerald PUD)
   ODOT Banner Application must accompany Veneta permit

Please attach a copy of the proposed banner.
Banner must meet Lane Electric and/or ODOT specifications.

3. Proof of Insurance
   Please attach a copy of proof of insurance listing **both city and the respective utility as additionally insured** for the proposed dates **(ODOT will need to be listed as additionally insured for all Territorial Hwy banners).**

Signature: [signature] Date: 6-8-2016

City of Veneta use only below line
Date Received in City Hall: 6·10·16 Time Received: 8:00 am
Received By: DHenderson
Public Works Approval: [signature]
Date applicant notified of decision: _____
Application forwarded to (circle one): ODOT Lane Electric EPUD
Further action requested: ☐ Yes ☒ No
If yes, explain: _____

S:\FORMS\Public Works\City Banner Permit.docx

Oregon Department of Transportation

APPLICATION AND PERMIT TO OCCUPY OR PERFORM OPERATIONS UPON A STATE HIGHWAY

See Oregon Administrative Rule, Chapter 734, Division 55

PERMIT NUMBER: T05M41462

CLASS: | KEY#

GENERAL LOCATION

HIGHWAY NAME AND ROUTE NUMBER: OR-200 / 200 / Territorial

HIGHWAY NUMBER: 200 | COUNTY: Lane

BETWEEN OR NEAR LANDMARKS: BROADWAY & RR CROSSING

HWY. REFERENCE MAP: AML | DESIGNATED FREEWAY: ☐ YES ☒ NO | IN U.S. FOREST: ☐ YES ☒ NO

APPLICANT NAME AND ADDRESS:
ST. CATHERINE OF SIENA CATHOLIC CHRUCH
ATTN: DEANNA VALENZUELA - 25181 E. Broadway
PO BOX 277
VENETA, OR 97487 541-505-2190

PURPOSE OF APPLICATION (TO CONSTRUCT/OPERATE/MAINTAIN)

☐ POLE LINE | TYPE | MIN. VERT. CLEARANCE

☐ BURIED CABLE | TYPE

☐ PIPE LINE | TYPE

☐ NON-COMMERCIAL SIGN | FEE AMOUNT: $0.00

☐ MISCELLANEOUS OPERATIONS AND/OR FACILITIES AS DESCRIBED BELOW

FOR ODOT USE ONLY

BOND REQUIRED: ☐ YES ☒ NO | REFERENCE: OAR 734-55 035(2) | AMOUNT OF BOND: $0.00

INSURANCE REQUIRED: ☒ YES ☐ NO | REFERENCE: OAR 734-55 035(1) | SPECIFIED COMP. DATE

DETAIL LOCATION OF FACILITY (For more space attach additional sheets)

MILE POINT	TO MILE POINT	ENGINEERS STATION	TO ENGINEERS STATION	SIDE OF HWY OR ANGLE OFCROSSING	DISTANCE FROM CENTER OF PVMT	DISTANCE FROM R/W LINE	BURIED CABLE OR PIPE DEPTH/VERT.	BURIED CABLE OR PIPE SIZE AND KIND	SPAN LENGTH
19.7		115+32		90°	VARIES	VARIES	BANNER	XXX	XXX

DESCRIPTION AND LOCATION OF NON-COMMERCIAL SIGNS OR MISCELLANEOUS OPERATIONS FACILITIES

BANNER PERMIT - To advertise event on 7-31-16. Banner to be hung approximately 2 weeks prior to event - on or about 7-19-16, and removed approx. 8-2-16

SPECIAL PROVISIONS (FOR MORE SPACE ATTACH ADDITIONAL SHEETS)

TRAFFIC CONTROL REQUIRED

- ☐ YES [OAR 734-55-025(6)] ☒ NO

- OPEN CUTTING OF PAVED OR SURFACED AREAS ALLOWED?

- ☐ YES [OAR 734-55-100(2)] ☒ NO [OAR 734-55-100(1)]

- AT LEAST 48 HOURS BEFORE BEGINNING WORK, THE APPLICANT OR HIS CONTRACTOR SHALL NOTIFY THE DISTRICT REPRESENTATIVE AT TELEPHONE NUMBER: ~~541-935-7111~~ 541-726-2577 OR FAX A COPY OF THIS PAGE TO THE DISTRICT OFFICE AT: N/A SPECIFY TIME AND DATE IN THE SPACE BELOW.
- A COPY OF THIS PERMIT AND ALL ATTACHMENTS SHALL BE AVAILABLE AT THE WORK AREA DURING CONSTRUCTION.
- ATTENTION: Oregon Law requires you to follow rules adopted by the Oregon Utility Notification Center. Those rules are set forth in OAR 952-001-0010 through OAR 952-001-0090. You may obtain copies of the rules by calling the center at (503) 232-1987.
CALL BEFORE YOU DIG 1-800-332-2344

COMMENTS - ODOT USE ONLY

PERMIT AND PERMISSION TO HAVE BANNER WITHIN ODOT RIGHT OF WAY. BANNER TO READ: "61ST ANNUAL FERN RIDGE BEEF PIT BBQ" DAY OF THE EVENT IS 7-31-16 12:00 PM TO 5:00 PM. BANNER TO BE INSTALLED ON 7-19 AND REMOVED ON 8-2 BY LOCAL UTILITY.

IF THE PROPOSED APPLICATION WILL AFFECT THE LOCAL GOVERNMENT, THE APPLICANT SHALL ACQUIRE THE LOCAL GOVERNMENT OFFICIAL'S SIGNATURE BEFORE ACQUIRING THE DISTRICT MANAGER'S SIGNATURE.

LOCAL GOVERNMENT OFFICIAL SIGNATURE		TITLE	DATE
X Ric Ingham		Ric Ingham, City Administrator	07.12.16
APPLICANT SIGNATURE	APPLICATION DATE	TITLE	TELEPHONE NO.
X Deanna Valenzuela	7-11-16	BBQ COMMITTEE REP.	541-505-2190
When this application is approved by the Department, the applicant is subject to, accepts and approves the terms and provisions contained and attached; and the terms of Oregon Administrative Rules, Chapter 734, Division 55, which is by this reference made a part of this permit.		DISTRICT MANAGER OR REPRESENTATIVE	APPROVAL DATE
		[signature]	7.13.16

734-3457(2-06)

T 05M41462

STREET BANNER PERMIT APPLICATION

City of Veneta
PO Box 458
88184 8th St
Veneta, OR 97487
(541) 935-2191

VENETA oregon

This form must be submitted to Veneta City Hall no later than three weeks prior to the date requested. Applications will be processed on a first come, first serve basis. All banners are subject to appropriate jurisdictional approval. Banners are only allowed for the following entities: governmental entities, special district organizations, non-profit organizations. Banners shall be permitted to promote only the following activities: public service activity which provides benefits to the community as a whole; artistic or literary activities, provided that artistic shall include music and the performing arts; scholastic activities which are defined as activities sponsored by organizations which carry on general education activities. Banners may display the name, slogan, advertising, logo or trademark of any sponsor of the activity. Banners shall not be permitted to advertise the following: promote or be sponsored by any political candidate/party, religious, issue group, or be carried on for the purpose of earning a profit.

1. Organization Information
   Entity: St. Catherine of Siena Catholic Church
   Purpose: Fernridge Beef Pit BBQ-banner hanging
   Contact Person: Deanna Valenzuela
   Phone Number: 541-505-2190
   Email: stcofsienaveneta@aol.com

2. Permit Information
   Event Date 7-31-16
   Requested time period for banner display: Start Date 7-18-16 End Date 8-1-16
   Requested banner location:

   ☒ Luther Ln (Lane Electric Cooperative)

   ☒ Territorial Hwy (Emerald PUD)
   ODOT Banner Application must accompany Veneta permit

   Please attach a copy of the proposed banner.
   Banner must meet Lane Electric and/or ODOT specifications.

3. Proof of Insurance
   Please attach a copy of proof of insurance listing **both city and the respective utility as additionally insured** for the proposed dates **(ODOT will need to be listed as additionally insured for all Territorial Hwy banners).**

Signature: [signature] Date: 7-11-16

City of Veneta use only below line
Date Received in City Hall: 7-8-2016 Time Received: _____
Received By: D Hennemann
Public Works Approval: [signature]
Date applicant notified of decision: _____
Application forwarded to (circle one): ODOT Lane Electric EPUD
Further action requested: ☒ Yes ☒ No
If yes, explain: _____

S:\FORMS, APPLICATIONS & TEMPLATES\Public Works\Banners Revised 7/9/2015

City of Veneta
M E M O R A N D U M

Date: July 15, 2016

To: City Council

From: Kyle Schauer, Public Works Director

Subject: Monthly Significant Activities Report for June 2016

Water

Monthly water production: Wells-16.507 MG, EWEB-5.935 MG.
Total of 22.442 MG.
Installed two new meters.
Repaired two service line leaks.
Took five bacteriological samples. All were negative.
Performed 87 service calls.
Delivered 55 Shut Off Notices.
Performed four shut offs for non-payment.
Repaired hydrant on Kingpin Loop.
Made repairs to Bolton Hill Reservoir booster pump.

Wastewater

Took five influent and five effluent samples of treatment plant. Possible violations due to wastewater treatment plant upset. Contacted DEQ.
Unknown substance entered WWTP and killed off all biological function.
Held treated effluent in pond entire month because it did not meet requirements.
Worked with DEQ to develop a temporary permit that will allow for land application in July.
Cleaned and tried to revive WWTP by increasing air and isolating one basin to nurture.
Inspected all lift stations and manholes for signs of tampering or illegal dumping. None found.
Pumped water from treated effluent pond into surge basin for more effluent holding capacity.
Monitored Jeans and Pine Street lift pump stations.
Repaired failed asphalt on driveway to WWTP.
Assisted resident with clogged sewer line on Broadway.
Took sludge and soil samples in preparation of August land application of WWTP sludge.

Street/Storm Drainage

Issued two Right of Way Construction Permits.
Replaced/repaired four street signs.
Lots of mowing around detention ponds, swales, and City owned properties.
Removed brush blocking signs and fire hydrants in Right of Way.
Mowed high grass along Right of Way of East Hunter Road.

Parks & Recreation
Cleaned parks weekly.
Mowed all parks weekly.
Brought all pool functions online.
Cleaned pool and pool building.
Cleaned and readied all pool equipment.
Replaced acid pump.
Replaced pump for chlorinator.
Opened Veneta Community Pool for season.

Other
Completed 11 miscellaneous service orders.
Performed 34 utility locates.
Community center use: paying-nine, non-profit-five
Building Permits: Two
Certificates of Occupancy: Three
Removed signs from the Right of Ways weekly.
Removed graffiti from 8th Street Bridge.
Hosted three classes of 2nd Graders from Veneta Elementary for tour of Public Works.

City of Veneta Monthly Police Activity- June 2016

Prepared by Sgt. Billy Halvorson, LCSO

Calls for Service by Incident Types:

Incident Type	Calls	Case #s
Property	29	17
Person	35	3
Public Order	35	2
Individual Welfare	24	3
Vehicle	24	6
Offense Against State	9	5
Civil	7	0
Skate Park	21	
Total	**184**	**36**

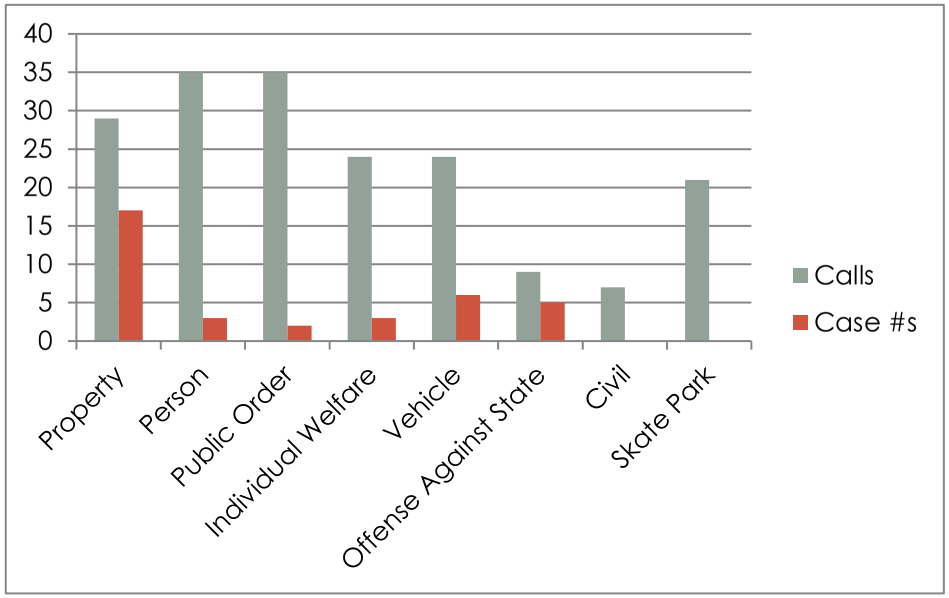

Property (Thefts, Criminal Mischief, Trespass)
Person (Assaults, Menacing, Harassment, Viol. Restraining Order)
Public Order (Disorderly Subjects, Suspicious Vehicles/Persons)
Individual Welfare (Welfare Checks, Missing Persons, Overdose, Suicidal Subjects)
Vehicle (DUII, DWS, Illegal Parking/Vehicles, Traffic Hazard)
Offense Against State (Drug, Warrants)
Civil (Civil Service, Eviction Process)

Name Bailey Frydendall Committee Applying for Park board Date 6-1

1. Please give a brief description of the experience or training that qualifies you for membership on this commission/committee. (If you wish, you may attach a resume or other pertinent material.) I am involved with School events, such as Planning Prom and Class fundraising

2. Why do you want to become a member of the above-mentioned commission/committee and what specific contribution would you hope to make?
To make sure our Parks remain a fun and Safe Place for everyone who visits them

3. Please list the community concerns related to this commission/committee that you would like to see addressed if you are appointed.
Safety and Cleanliness of our Parks

4. Briefly describe your present or past involvement in relevant community groups. (Having no previous involvement will not disqualify you for appointment.)
I was involved with Junior girls, we did Community Service Projects to help Veterans and Participated in Stand down making bags of bathroom items and clothing to give to homeless vets

5. Are you currently serving on any Advisory Boards, Commissions or Committees? If so, which ones?
Not currently

6. Are you employed by, have any business, contractual arrangements or family connections with programs having contractual agreements with the City that might be within the purview of the committee on which you are seeking appointment?
NO

S:\FORMS\Volunteers\Commission & Committee Application form.rtf

Name Briana Bryant Committee Applying for Park Board Date 6/1/16

1. Please give a brief description of the experience or training that qualifies you for membership on this commission/committee. (If you wish, you may attach a resume or other pertinent material.) I have been involved in Student Government / Leadership for the past 5 years. I am very involved in my school and church.

2. Why do you want to become a member of the above-mentioned commission/committee and what specific contribution would you hope to make?
I want to become a member to better the community I live in. I hope to bring a "young" perspective to the organization being a student.

3. Please list the community concerns related to this commission/committee that you would like to see addressed if you are appointed.
1. Safety in Parks
2. Activities for all ages
3. Cleanliness in community areas.

4. Briefly describe your present or past involvement in relevant community groups. (Having no previous involvement will not disqualify you for appointment.)
I am a member of National Honor Society where we do community "road clean up" jobs. I am also involved at my church in Veneta where I participate in many activities including fund raising and "work parties."

5. Are you currently serving on any Advisory Boards, Commissions or Committees? If so, which ones?
no

6. Are you employed by, have any business, contractual arrangements or family connections with programs having contractual agreements with the City that might be within the purview of the committee on which you are seeking appointment?
no

S:\FORMS\Volunteers\Commission & Committee Application form.rtf

Darci Henneman

From: School Support <schoolsupport@winpubco.com>
Sent: Wednesday, June 29, 2016 11:39 AM
To: Darci Henneman
Subject: Elmira High School
Attachments: Elmira.pdf; ATT00001.htm; Elmira Fall 2015.pdf; ATT00002.htm

RECEIVED
JUN 29 2016
CITY OF VENETA

Dear sponsor,

Thank you for taking the time to review this sponsorship opportunity for the Elmira High School Athletic Department.

Just like last time, the level of sponsorship you choose is displayed on large, full-color, laminated wall posters that feature the Falcon's mascot, all of the school's fall athletic team schedules, and the business sponsors proudly displayed around the edge of the schedules (see attached sample poster). These are the big posters that feature the football schedules that stay up for the entire school year..

As an added value, at no additional charge, your sponsorship is also included on full color personal posters! These are just like the big ones only specially sized to fit on refrigerators and in lockers. They are given to students, parents, faculty, and they are even handed out at home games to members of the community!

The athletic department operates on a strict budget. That budget limits what the coaches can provide for their student athletes. Your generosity regarding this sponsorship opportunity fills that gap and helps provide the kids with the sporting equipment they need.

To guarantee your spot on the Elmira Falcon's 2016 fall sports posters please complete and return the attached page or call today. Space is limited and will be allocated on a first-come, first-serve basis.

GO FALCONS!

Thanks again,

Marissa Sage
Project Manager
WIN Publishing
PO Box 1139
Nixa, Mo. 65714
Office - (888) 780-9555
Fax – (888) 412-6133
Winpubco.com

SPORTS POSTER

ELMIRA High School

SUPPORT YOUR COMMUNITY WITH HIGH VISIBILITY EXPOSURE!

HELP OUTFIT THE PLAYERS & TEAMS WITH NECESSITIES!

FULL COLOR ADS AND FREE GRAPHIC DESIGN SERVICES!

SPONSORSHIP LEVELS

	PRICE:	AD SIZE:
☐	$150	2" x 2"
☐	$250	BUSINESS CARD (3.5" x 2")
☐	$400	DOUBLE BUSINESS CARD (3.5" x 4") or (7" x 2")
☐	$500	4" x 5"
☐	$600	QUAD BUSINESS CARD (7" x 4")

EXCLUSIVES AND LARGER SPONSORSHIPS AVAILABLE

PLEASE COMPLETE AND FAX BACK TO 888-412-6133

BUSINESS NAME: _____

CONTACT NAME: _____

ADDRESS: _____

_____

PHONE NUMBER: _____

E-MAIL: _____

WINPublishing INCORPORATED
1211 Eaglecrest
PO Box 1139
Nixa, MO 65714
(417) 725-2931 Office
(888) 780-9555 Toll Free
888) 412-6133 Fax
www.winpubco.com

Elmira HIGH SCHOOL

2015 FALL SPORTS

Football Varsity

September
4 ..... 7:00 ..... NEHS
12 ..... 11:00 ..... Sutter @ Autzen Stadium
18 ..... 7:00 ..... Klamath Union
25 ..... 7:00 ..... Cottage Grove
October
2 ..... 7:00 ..... Junction City
9 ..... 7:00 ..... Sutherlin
16 ..... 7:00 ..... Sweet Home
23 ..... 7:00 ..... Sisters

Volleyball Varsity

August
28 ..... 6:00 ..... Douglas
September
2 ..... 6:30 ..... Siuslaw
8 ..... 6:30 ..... Philomath
10 ..... 5:00 ..... Double Dual Molalla/North Marion
15 ..... 6:30 ..... CGHS
17 ..... 6:30 ..... JCHS
22 ..... 6:30 ..... Sisters
24 ..... 6:30 ..... Sutherlin
29 ..... 6:30 ..... Sweet Home
October
1 ..... 6:30 ..... CGHS
3 ..... TBA ..... Tourn. @ Junction City
8 ..... 6:30 ..... JCHS
13 ..... 6:30 ..... Sisters
15 ..... 6:30 ..... Sutherlin
17 ..... TBA ..... Tourn. @ Philomath
20 ..... 6:30 ..... Sweet Home

Cross Country

August
27 ..... TBA ..... Night Meet @ Wilsonville
September
3 ..... TBA ..... Umpqua Opener @ Stewart Park
12 ..... TBA ..... Ash Creek Festival @ Western Oregon Univ.
18 ..... TBA ..... East Linn 3K Relays @ Cheadle Lake Park
26 ..... TBA ..... Woahink Lake Inv. @ Honeyman State Park
30 ..... TBA ..... Santiam Christian Inv. @ Adair Village
October
3 ..... TBA ..... Paul Mariman Inv. @ Philomath
8 ..... TBA ..... Chemawa Inv.
14 ..... TBA ..... Country Fair Classic @Country Fair Grounds
21 ..... TBA ..... Sky Em League Champ. @ Lane Community College
31 ..... TBA ..... OSAA 4A State Champ. @ Lane Community College

Soccer Girls Varsity

September
1 ..... 6:00 ..... South Umpqua
8 ..... 4:00 ..... Estacada
15 ..... 4:00 ..... Cascade
17 ..... 4:30 ..... JCHS
22 ..... 6:00 ..... Sisters
24 ..... 4:30 ..... Sutherlin
29 ..... 4:30 ..... Sweet Home
October
1 ..... 4:00 ..... CGHS
8 ..... 4:30 ..... JCHS
13 ..... 4:00 ..... Sisters
15 ..... 7:00 ..... Sutherlin
20 ..... 7:00 ..... Sweet Home
22 ..... 7:00 ..... Cottage Grove

Soccer Boys Varsity

September
1 ..... 4:00 ..... South Umpqua
8 ..... 4:00 ..... Estacada
15 ..... 4:00 ..... Cascade
17 ..... 4:30 ..... JCHS
22 ..... 4:30 ..... Sisters
24 ..... 4:30 ..... Sutherlin
29 ..... 7:00 ..... Sweet Home
October
1 ..... 7:00 ..... CGHS
8 ..... 4:30 ..... JCHS
13 ..... 4:00 ..... Sisters
15 ..... 7:00 ..... Sutherlin
20 ..... 4:00 ..... Sweet Home
22 ..... 7:00 ..... Cottage Grove

Home Games in Bold

Dates and Times Subject to Change

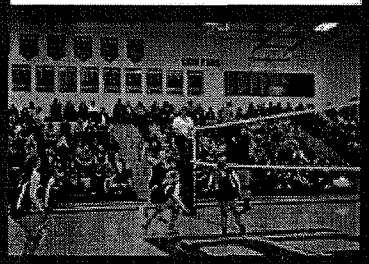

Special Thanks to the area businesses for their continued support on the Elmira High School Athletic Department.

balanced electric INC.
541-998-4610
www.balanced-electric.com

Blachly Lane
Blachly-Lane Electric Coop

Mid Lane Cares
541-935-0948
MidLaneCares.org

THE PET PANTRY
541-935-PETS (7387)
thepetpantry@yahoo.com

DQ
541-935-1112
24943 Hwy 26
Veneta, OR 97487
Proudly Supporting the Falcons!

Green Streak Automotive
25794 Hwy 126 | Veneta
541.935.1415
Mon. - Fri. 8:00 a.m. to 5:00 p.m.

PAPE AUTOMOTIVE
25865 Hwy 126
Veneta
541-935-0117

THE TRACTOR STORE
BRANSON & ZETOR TRACTORS
PARTS - SALES - SERVICE
WILL SCHWARTZ
(541) 342-5464 • 5450 W. 11th • Eugene, OR 97402

Mary's Large & Small PET SITTING
Hugs, Kisses, & Tender Care
Mary Brayton
541-935-2854
Proud to Support Local Youth

VANGUARD TECHNOLOGY INC.
29495 Airport Rd.
Eugene, OR 97402
541-461-6020
Hi-Efficency Production Hot H_2O

Ixtapa Mexican Restaurant
24965 Hwy. 126 - Veneta
541-935-5767
Proud Supporter of Area Youth

Paul Mariman Marine
Veneta, OR 541-935-2011

Klassic Tails Inn
(541) 935-1180
Unleash the Fun!
DOG & CAT BOARDING
www.klassictailsinn.com
90030 Knight Rd • Elmira, Oregon 97437

Pacific Hometown Insurance
Auto • Home • Farm • Business • Life • Health
24957 Hwy. 126 | Veneta, OR 97487
541-935-8801

The Water Guy, Inc.
For Service & Repair
541-935-4904 or 541-935-8715

FERN RIDGE PUBLIC LIBRARY
935-7512
Veneta Library

Grace Fellowship
Noti, OR
541-935-0324

A+ Action Auto Repair & Towing
A+ Action Auto Sales
•AUTO REPAIR •SALES •TOWING
Elmira-Veneta 541-935-8511
Eugene 541-485-1523
Junction City 541-998-0911
Lane County's Finest!

NAPA
SUNSET AUTO PARTS
sunsetautoparts.com
25901 Hwy. 126 | Veneta, OR 97487
541-935-2963

FISHER PEST MANAGEMENT
COMMERCIAL & RESIDENTIAL PEST & WEED CONTROL
Rick's Spray Service
Free & Shrub Pest Control
541-935-7979
FISHERPESTMANAGEMENT.COM

Veneta Medical Clinic

VENETA FAMILY DENTAL
541.935.2113
Dr. Tracy Robinson

Swanson Bros. Lumber Co., Inc.

WIN Publishing • (417) 725-2931 • (888) 780-9555 Toll-Free • PO Box 1139 • Nixa, MO 65714 • www.winpubco.com • FOR-102

VENETA CITY COUNCIL
AGENDA ITEM SUMMARY

Title/Topic: Presentation of Engineer's Report and Adoption of 8th Street Sewer Improvement LID Resolution No. 1204

Meeting Date: July 25, 2015
Department: Community Development

Staff Contact: Kay Bork
Email: kbork@ci.veneta.or.us
Telephone Number: 541-935-2191 Ext.314

ISSUE STATEMENT
Council is being asked to take action on the Engineer's Report per Veneta Municipal Code Chapter 3.10.030. If Council approves the Engineer's Report, it may pass a Resolution declaring the City's intent to make the improvement, to form an LID to fund the improvement, and set a public hearing on the proposed improvement.

Staff is presenting a revised Engineer's Report dated June 27, 2016. Also attached to this memo is the original Engineer's Report dated May 13, 2016 which was presented to Council on June 13, 2016.

BACKGROUND
On April 11, 2016 the City Council made a motion to direct the City Engineer to prepare a report for the 8th Street sewer improvement LID in accordance with Veneta Municipal Code Chapter 3.10.020.

Local Improvement District formation is regulated by the City's Municipal Code (VMC), Chapter 3.10 – Public Improvements and Special Assessments. The first step in the formation of an LID is for Council to direct the City Engineer to prepare a report. VMC, 3.10.020 states such report shall contain the following:

1) A map or plat showing the general nature, location and extent of the proposed improvement and the land to be assessed for the payment of any part of the cost thereof;
2) Estimates of the work to be done; provided, however, that where the proposed project is to be carried out in cooperation with any other governmental agency, the engineer may adopt the plans, specifications or estimates of such agency;
3) An estimate of the probable cost of the improvement including any legal, administrative and engineering costs attributable thereto;
4) An estimate of the unit cost of the improvement to the specially benefited properties;
5) A recommendation as to the method of assessment to be used to arrive at a fair apportionment of the whole or any portion of the cost of the improvement to the properties specially benefited;
6) The description (county tax lot numbers) and assessed value of each lot, parcel of land, or portion thereof, to be specially benefited by the improvement with the names of the record owners thereof and, when readily available, the names of the contract purchasers thereof; and
7) A statement of outstanding assessments against property to be assessed.

The revised Engineers Report, dated June 27, 2016, includes an updated Engineer's estimate. The revised report eliminates a portion of the sewer lateral from the LID portion of the project. The City would be responsible for the cost to construct a portion of the sewer lateral from Dunham Street running 175 feet south along 8th Street. Total construction costs are estimated at $138,276 where City costs are $34,570 and LID costs are $103,706. The May 13, 2016 Engineer's Report estimated total LID costs to be $137,993.

City Council can adopt the May13, 2016 or the June 27, 2016 Engineer's Report and adopt Resolution 1204. Also the Council may modify the methodology presented in the Engineer's Report before passing an assessment ordinance, per VMC 3.10.090. In the case of the East Bolton LID, the Assessment Ordinance was adopted after the improvements were constructed and costs were finalized.

> *"VMC 3.10.090 (2)(b): At any time prior to the effective date of the ordinance levying the assessments for any improvement district, modify the method adopted in the resolution forming the improvement district if the council determines that a different method is a more just and reasonable method of apportioning the cost of the project to the properties benefited."*

RELATED CITY POLICIES

Veneta Municipal Code Chapter 3.10 regulates the formation of an improvement district. The City Council has passed several previous Ordinances for the formation and assessment of properties for an LID.

COUNCIL OPTIONS

Per Veneta Municipal Code Section 3.10.030 - Council's action on Engineer's report, Council has four options. The Council may:

1. Approve the Report (May 13, 2016 or June 27, 2016 report)
2. Modify the Report and approve as modified,
3. Require the engineer to supply additional or different information for such improvements
4. Abandon the improvement

CITY ADMINISTRATOR'S RECOMMENDATION

Make a motion to approve the June 27, 2016 Engineer's Report.

SUGGESTED MOTIONS

"I make a motion to approve the [May 13, 2016 or June 27, 2016] Engineer's Report for the 8th Street Sewer Improvement LID" ***AND***

"I make a motion to adopt Resolution 1204, a Resolution Designating Proposed Wastewater Collection System Improvements on 8th Street and Declaring the City's Intention to Form a Local Improvement District to Fund Such Improvements, and set a public hearing on the proposed improvement for {DATE}.

ATTACHMENTS

1. Engineer's Report for 8th Street Sewer Improvement LID, May 13, 2016
2. Engineer's Report for 8th Street Improvement LID, June 27, 2016.

ENGINEER'S REPORT

Local Improvement District
8th Street Sewer

Branch Engineering Project #14-006f

For
City of Veneta
P.O. Box 458
Veneta, OR 97487

REGISTERED PROFESSIONAL ENGINEER #52996
OREGON FEBRUARY 8, 2000
MICHAEL LANE BRANCH
EXPIRES: 12/31/17

May 13, 2016

Branch ENGINEERING inc
Since 1977
civil · transportation
structural · geotechnical
SURVEYING
www.BranchEngineering.com

Contents

Page No.

Introduction 1

Project Summary 1

Construction Cost Estimate: (Estimate of Probable Cost) 2

Assessment of Unit Costs to be Applied to Each Property 2

Recommendation 3

Descriptions of Specially Benefitted Properties 3

Statement of Outstanding Assessments 3

Appendix

Description

Exhibit 1 — Project Site Map

Exhibit 2 — Construction Drawings

INTRODUCTION

This document outlines a possible Local Improvement District (LID) to extend wastewater service to multiple properties not currently connected to the City of Veneta wastewater system. The benefits of a project like this include a reduction in potential risks to groundwater contamination from septic tanks and their maintenance, and it ensures compliance with the City's sewer ordinance for wastewater connection. It also provides an opportunity for the benefited properties to share in the cost of the improvements.

The proposed LID will extend gravity sewer service to seven tax lots totaling 2.34 acres located near the 8th Street/McCutcheon intersection. The project includes approximately 560 feet of 8-inch sewer pipe, 210 feet of 6-inch sewer pipe, two manholes, and cleanouts (see Exhibit 1 in the Appendix).

A Local Improvement District is a method by which a group of property owners can share in the cost of infrastructure improvements. If an LID is formed, the City manages the design and construction of the project, and property owners do not pay until the work is complete. The improvements can also be completed under a permit job, in which case the project is privately managed and financed up front by property owners.

Veneta Municipal Code 3.10.020 requires the following elements to be included in an improvement district report:

- A map showing the general nature and extent of the improvements
- Estimates of the work to be done
- An estimate of probable cost
- An estimate of unit costs attributable to benefited properties
- A recommendation as to the method of assessment that allocates a fair apportionment of benefited properties
- Descriptions of specially benefited properties
- A statement of outstanding assessments

In accordance with Municipal Code Chapter 3.10.040, the council shall by resolution:

1. Designate the proposed improvements
2. Declare its intention to make such improvements
3. Provide the manner and method for carrying out the improvements
4. Direct the city recorder to schedule a public hearing regarding the proposed improvements and provide the required notice

PROJECT SUMMARY

The properties selected for the LID are currently not served by public sewer and require significant off-site improvements to gain sewer service. The proposed LID boundary (as illustrated in Exhibit 1) includes seven tax lots totaling an area of 2.34 acres. Each lot will be provided with a single lateral.

The proposed improvements include extending an 8-inch public gravity sewer pipe in 8th Street from Hunter to just south of McCutcheon, and an 8-inch pipe in McCutcheon from 8th Street to approximately 180 feet east. Also, a 6-inch diameter sewer lateral will be constructed to the edge of the adjacent right-of-way for each of the seven benefited tax lots.

Preliminary construction plans have been completed for the project and are included in the Appendix. An estimate of probable cost has been generated for the proposed improvements, and is as follows:

ESTIMATE OF PROBABLE PROJECT COST					
Item No.	**Description**	**Estimated Quantity**	**Unit**	**Unit Cost**	**Price**
1	**Mobilization, Bonds and Insurance**	1	Lump Sum	$9,480.00	$9,480
2	**Erosion Control**	1	Lump Sum	$2,000.00	$2,000
3	**Traffic Control**	1	Lump Sum	$5,000.00	$5,000
4	**8" Wastewater Pipe (10'+/- Depth)**	560	Lineal Feet	$80.00	$44,800
5	**6" Wastewater (Laterals)**	210	Lineal Feet	$70.00	$14,700
6	**Wastewater Cleanout**	2	Each	$500.00	$1,000
7	**Wastewater Manhole**	2	Each	$5,000.00	$10,000
8	**HMAC Trench Patch**	110	Ton	$130.00	$14,300
9	**Landscape Restoration**	1	Lump Sum	$3,000.00	$3,000
Construction Cost					$104,280
City Administrative & Legal Costs					$3,200
Surveying/Testing (2%)					$2,085
Engineering (10%)					$10,428
LID Participation					$119,993
				Contingency (15%)	$18,000
				Total LID Cost	$137,993

ASSESSMENT OF UNIT COSTS TO BE APPLIED TO EACH PROPERTY

Veneta Municipal Code, Section 3.10.020 requires that the method of assessment include all benefited property and that it is a fair apportionment, all of which is to be approved by the Council. The Council may also modify the assessment method, or use other means for financing.

The assessment apportioned to each parcel is based on the cost per acre of benefited property (to the nearest hundredth of an acre), as collected from the Lane County Database. The unit cost was determined by dividing the total system cost by the total improvement district area per Veneta Municipal Code section 3.10.090(4)(d)(i).

ESTIMATE OF UNIT COSTS TO BENEFITED PROPERTIES						
Assessor's Map	Tax Lot	Owner's Mailing Address	Owner Name	Lot Area (Acre)	Percent of LID Area	2016 Projected LID Cost per Lot
17063613	7600	88138 8th Street	McAdams, Julilah L & Troy A	0.38	16.24%	$22,410
	7700	88138 8th Street	McAdams, Julilah L & Troy A	0.75	32.05%	$44,227
	5000	24857 McCutcheon Ave	Konnie, Patti Lee & Noble, Gary M	0.12	5.13%	$7,079
	5100	24857 McCutcheon Ave	Konnie, Patti Lee & Noble, Gary M	0.12	5.13%	$7,079
	5200	PO Box 97, Veneta	Sullivan, Margarat A	0.25	10.68%	$14,737
	5300	27725 Royal Ave, Eugene	Louie, Jack H	0.56	23.93%	$33,022
	5400	90266 Sheffler Rd, Elmira	Dickenson, Lee W & Dorathy M	0.16	6.84%	$9,439
Total				**2.34**	**100%**	**$137,993**

RECOMMENDATION

It is our recommendation that the LID assessment be based on the cost per acreage of benefited property per current City Municipal code per Veneta Municipal Code.

The 8th Street sewer improvements will reduce potential risks to groundwater contamination from septic tanks and their maintenance and also ensure compliance with the City's sewer ordinance for wastewater connection. The cost of the project is significant to the benefited properties; however, due to limited available service options and funding opportunities, the 8th Street Sewer LID provides an opportunity for property owners to share in the cost of providing sewer to the area.

DESCRIPTIONS OF SPECIALLY BENEFITED PROPERTIES

As mentioned earlier, the assessed value of the project was distributed to those properties in the LID based on acreage of benefited property. For additional information, refer to the City of Veneta Municipal Code 3.10.090(4)(d)(i)

STATEMENT OF OUTSTANDING ASSESSMENTS

At this time no outstanding assessments have been identified. If any are discovered, the City will be notified to approach the issue accordingly.

Exhibit 1

Project Site Map

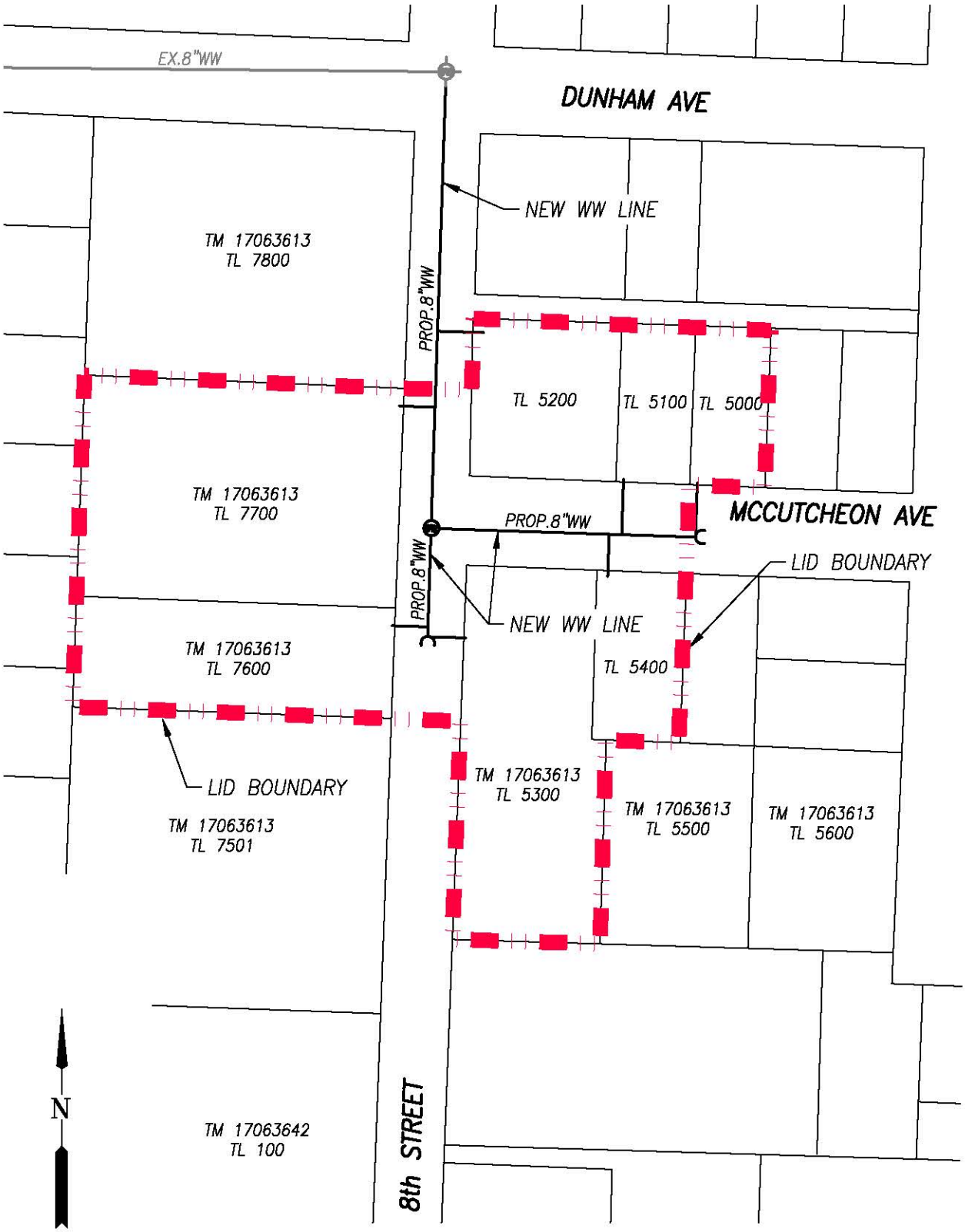

SCALE: 1" = 100'

EXHIBIT 1

Branch ENGINEERING INC. Since 1977

8th STREET SEWER SERVICE AREA

SITE MAP

Veneta, OR

MAY 10, 2016

310 5th Street, Springfield OR 97477 | p: 541.746.0637 | www.branchengineering.com

Project No:14-006f

Z:\2014\14-006f 8th Street Sewer\14-006e Map Alt 1 And 2.dwg 5/10/2016 11:36 AM MARISSA

Exhibit 2

Construction Drawings

8th STREET SANITARY SEWER

BETWEEN DUNHAM AVE AND McCUTCHEON AVE
CITY OF VENETA, OREGON

EROSION CONTROL NOTES

A. USE PROTECTIVE MEASURES TO PREVENT DEBRIS FROM ENTERING STORM SYSTEM. PROTECT DOWNSTREAM CATCH BASINS OR ANY OTHER STORM WATER INLET WITH BIO-BAGS DURING CONSTRUCTION.

B. ALL WASTE MATERIAL ASSOCIATED WITH THIS PROJECT SHALL BE PICKED UP AND DISPOSED OF ACCORDING TO APPLICABLE STATE, FEDERAL AND LOCAL REGULATIONS.

C. SCHEDULE STREET CLEANING AND END OF PROJECT OR AS DIRECTED BY THE CITY OF VENETA.

RESTORATION NOTES

A. RESTORE OR REPLACE ANY DISTURBED LANDSCAPING OF ADJACENT PROPERTIES TO NEW OR BETTER CONDITIONS.

B. DAMAGE TO PROPERTY BOTH PUBLIC AND PRIVATE DUE TO CONSTRUCTION ACTIVITIES SHALL BE REPAIRED OR REPLACED AT CONTRACTORS EXPENSE.

UTILITY NOTES

ATTENTION: OREGON LAW REQUIRES YOU TO FOLLOW RULES ADOPTED BY THE OREGON UTILITY NOTIFICATION CENTER. THOSE RULES ARE SET FORTH IN OAR 952-001-0001 THROUGH 952-001-0090. YOU MAY OBTAIN COPIES OF THE RULES BY CALLING THE CENTER AT (503) 232-1987 OR VISITING THEIR WEBS SITE AT WWW.DIGSAFELYOREGON.COM

CALL THE TOLL FREE "ONE-CALL" NUMBER AT 800-332-2344 OR 811 FOR LOCATES AT LEAST TWO DAYS IN ADVANCE OF EXCAVATION.

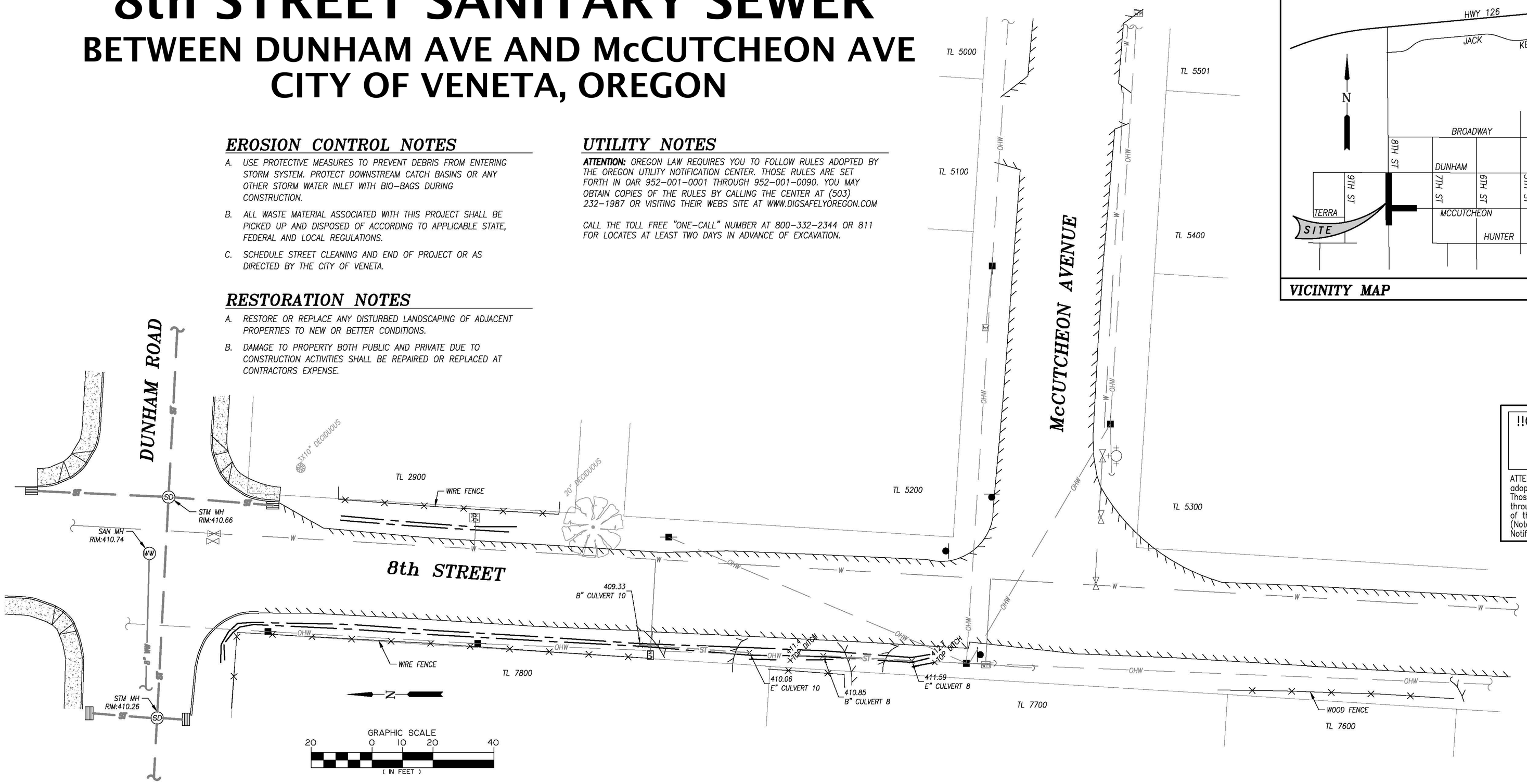

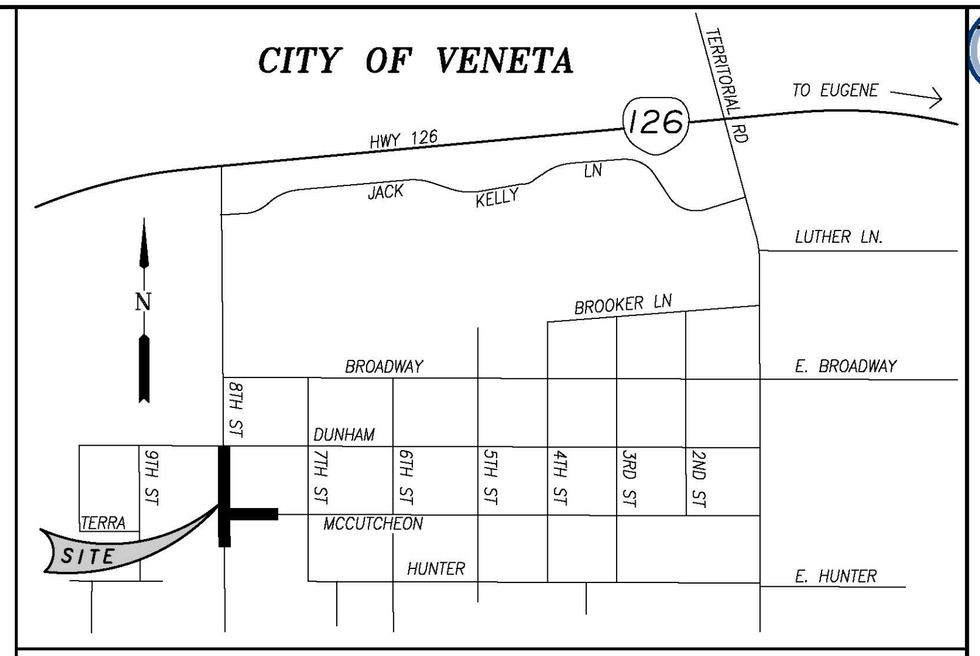

VICINITY MAP — NOT TO SCALE

!!CALL BEFORE YOU DIG!!
1-800-332-2344
TWO WORK DAYS
IN ADVANCE OF EXCAVATION

ATTENTION:Oregon law requires you to follow rules adopted by the Oregon Utility Notification Center. Those rules are set forth in OAR 952-001-0010 through OAR 952-001-0090. You may obtain copies of the rules by calling the center. (Note: the telephone number for the Oregon Utility Notification Center is (503)232-1987).

LEGEND - EXISTING

- EDGE OF ASPHALT CONCRETE
- STORM SEWER
- WASTEWATER SEWER
- WATERLINE
- OVERHEAD LINES
- FENCE
- BOTTOM OF SWALE
- SIGN
- POWER POLE
- GUY WIRE
- WATER METER
- WATER VALVE
- CATCH BASIN
- STORM WATER MANHOLE
- WASTEWATER MANHOLE
- ELECTRIC METER
- CONCRETE
- DECIDUOUS TREE
- SPOT ELEVATION
- BUILDING

NOTES

1. THIS DOES NOT CONSTITUTE A BOUNDARY SURVEY AND IS SUBJECT TO ANY INACCURACIES A SUBSEQUENT SURVEY MAY DISCLOSE.
2. LOCATIONS OF UNDERGROUND UTILITIES SHOWN ARE BASED ON A COMBINATION OF VISIBLE FACILITIES LOCATED ABOVE GROUND AND UTILITY LOCATE MARKS. NO CERTIFICATION IS MADE TO ACTUAL LOCATION OF UNDERGROUND UTILITIES.

GENERAL NOTES

1. CONSTRUCTION SHALL CONFORM TO THE OREGON STANDARD SPECIFICATIONS FOR CONSTRUCTION AND THE OREGON STANDARD DRAWINGS. WHERE VENETA STANDARD DRAWINGS ARE REFERENCED AND APPLICABLE TO THE CONSTRUCTION, VENETA STANDARDS SHALL APPLY.
2. ALL MATERIAL AND EQUIPMENT SHOWN HEREON IS SUBJECT TO REVIEW AND APPROVAL BY THE CITY. THE CONTRACTOR SHALL APPROVE AND PROVIDE THREE COPIES OF CATALOGUE CUT SHEETS FOR ALL MATERIAL AND EQUIPMENT TO BE INSTALLED ON THE PROJECT TO THE CITY ENGINEER. ALLOW A MINIMUM OF 10 DAYS FOR CITY ENGINEER REVIEW OF SUBMITTALS.
3. WORK SHALL NOT BE PERFORMED WITHOUT CITY INSPECTIONS. A MINIMUM 48-HOUR ADVANCE NOTICE OF REQUIRED INSPECTIONS IS REQUIRED. THE FOLLOWING ARE MINIMUM INSPECTION REQUIREMENTS:
   a. TV INSPECTIONS OF ALL SEWER AND DRAINAGE PIPING.
   b. HYDROSTATIC TESTING, DEFLECTION TESTING AND MANHOLE TESTING OF ALL SANITARY SEWER ELEMENTS.
4. CONTRACTOR SHALL FOLLOW RULES ADOPTED BY THE OREGON UTILITY NOTIFICATION CENTER REGARDING THE REQUIREMENTS FOR UTILITY LOCATES (OAR 952-001-0090). COPIES ARE AVAILABLE AT 1-800-332-2344.
5. THE CONTRACTOR SHALL PROTECT AND REPLACE ALL DISTURBED VEGETATION, FENCING AND OTHER IMPROVEMENTS ON PRIVATE PROPERTY.
6. CONTRACTOR SHALL PROVIDE AND MAINTAIN ACCESS TO EXISTING RESIDENTS DURING CONSTRUCTION.
7. ACCESS TO EXISTING FIRE HYDRANTS SHALL BE MAINTAINED THROUGHOUT CONSTRUCTION.
8. CONTRACTOR IS EXPECTED TO ACTIVELY ENGAGE IN EROSION CONTROL MEASURES TO MINIMIZE THE TRANSPORT OF SEDIMENT AND SOILS FROM THE CONSTRUCTION SITE. ACTIVE ENGAGEMENT SHALL MEAN THAT ALL EROSION CONTROL METHODS ARE MAINTAINED AND THAT THE FACILITIES ARE ROUTINELY INSPECTED FOR COMPLIANCE WITH ACCEPTED EROSION CONTROL PRACTICES.
9. ALL MANHOLES SHALL BE 48" INTERIOR DIAMETER. CONSTRUCT PER RD338. ALL MANHOLES SHALL RECEIVE A SEALANT COAT AS SPECIFIED.
10. SANITARY SEWER LATERALS WHERE SHOWN SHALL BE BROUGHT FROM THE SANITARY TEE FITTING AT A MAXIMUM GRADE OF 2% TO THE PROPERTY LINE.
11. FOR TREES MARKED FOR PROTECTION CONTRACTOR SHALL PROVIDE ORANGE PROTECTION FENCING AT DRIP LINE OF TREE.
12. FINAL LOCATION OF ALL LATERALS SHALL BE SET IN THE FIELD AT THE TIME OF CONSTRUCTION. CONTRACTOR MAY NEED TO ADJUST LOCATIONS BASED UPON FINAL FIELD STAKING.
13. CONTRACTOR SHALL KEEP ALL WORK WITHIN ESTABLISHED R-O-W. PRIVATE PROPERTY MAY NOT BE USED FOR MATERIAL STORAGE, EQUIPMENT OR STAGING UNLESS WRITTEN APPROVAL BY THE PROPERTY OWNER IS PROVIDED TO THE CITY.

PROJECT TEAM

CITY: KYLE SCHAUER,
PUBLIC WORKS DIRECTOR
CITY OF VENETA
88184 8TH STREET
PO BOX 458
VENETA, OR 97487
PH: (541) 935-2191
EMAIL: kschauer@ci.veneta.or.us

ENGINEER: LANE BRANCH, P.E.
BRANCH ENGINEERING, INC.
310 5TH STREET
SPRINGFIELD, OREGON 97477-4643
PH: (541) 746-0637
EMAIL: laneb@branchengineering.com

SURVEYOR: DAN NELSON, P.L.S.
BRANCH ENGINEERING, INC.
310 5TH STREET
SPRINGFIELD, OREGON 97477-4643
PH: (541) 746-0637
EMAIL: dann@branchengineering.com

SHEET INDEX

C1 NOTES & EXISTING CONDITIONS
C2 SEWER PLAN & PROFILE
C3 PROFILE & DETAILS
C4 DETAILS

Branch ENGINEERING Inc.
Since 1977
civil • transportation
structural • geotechnical
SURVEYING
310 Fifth Street
Springfield, OR 97477
p: 541.746.0637
www.BranchEngineering.com
Springfield OR | Salem OR

PRELIMINARY
NOT FOR CONSTRUCTION

project title:

8th STREET
SANITARY SEWER IMPROVEMENTS
CITY OF VENETA
88184 8TH STREET
VENETA, OREGON

revisions:

date:	MAY 12, 2016
drawn by:	MD
designer:	NP
project no:	14-006f

NOTES & EXISTING CONDITIONS

sheet: C1

Z:\2014\14-006f 8th Street Sewer\Drawings\14-006f Existing Conditions.dwg 5/12/2016 10:41 AM MARISSA

copyright © 2016 Branch Engineering, Inc.

LEGEND

- EXISTING EDGE OF ASPHALT CONCRETE
- EXISTING STORM SEWER
- EXISTING WASTEWATER SEWER
- EXISTING WATERLINE
- EXISTING OVERHEAD LINES
- EXISTING FENCE
- EXISTING BOTTOM OF SWALE
- EXISTING SIGN
- EXISTING POWER POLE
- EXISTING GUY WIRE
- EXISTING WATER METER
- EXISTING WATER VALVE
- EXISTING CATCH BASIN
- EXISTING STORM WATER MANHOLE
- EXISTING WASTEWATER MANHOLE
- EXISTING ELECTRIC METER
- EXISTING CONCRETE
- EXISTING DECIDUOUS TREE
- SPOT ELEVATION
- SAWCUT LINE
- PROPOSED WASTEWATER SEWER
- PROPOSED WASTEWATER MANHOLE

CONSTRUCTION NOTES

62 SAWCUT AND REMOVE EXISTING PAVEMENT AND REPLACE WITH LIKE MATERIAL PER ODOT STD DWG RD302 (SEE SHEET C3). PROVIDE 3" THICKNESS OF PAVEMENT FOR PAVEMENT REPLACEMENT.

240 CONSTRUCT STANDARD WASTEWATER MANHOLE PER ODOT STANDARD DRAWING RD338. SEE SHEET C4.

244 CONSTRUCT OUTSIDEDROP WASTEWATER MANHOLE PER ODOT STANDARD DRAWING RD352. SEE SHEET C4.

258 CONSTRUCT STANDARD SINGLE SEWER LATERAL AND CLEANOUT WITH 6" PIPE PER CITY STANDARD DRAWING V309. SEE SHEET C4.

281 CONSTRUCT STANDARD 8" PVC WASTEWATER PIPE, BACKFILL CLASS "B" PER ODOT STANDARD DRAWING RD300. SEE SHEET C3.

282 CONSTRUCT STANDARD CLEANOUT ON 8" PIPE.

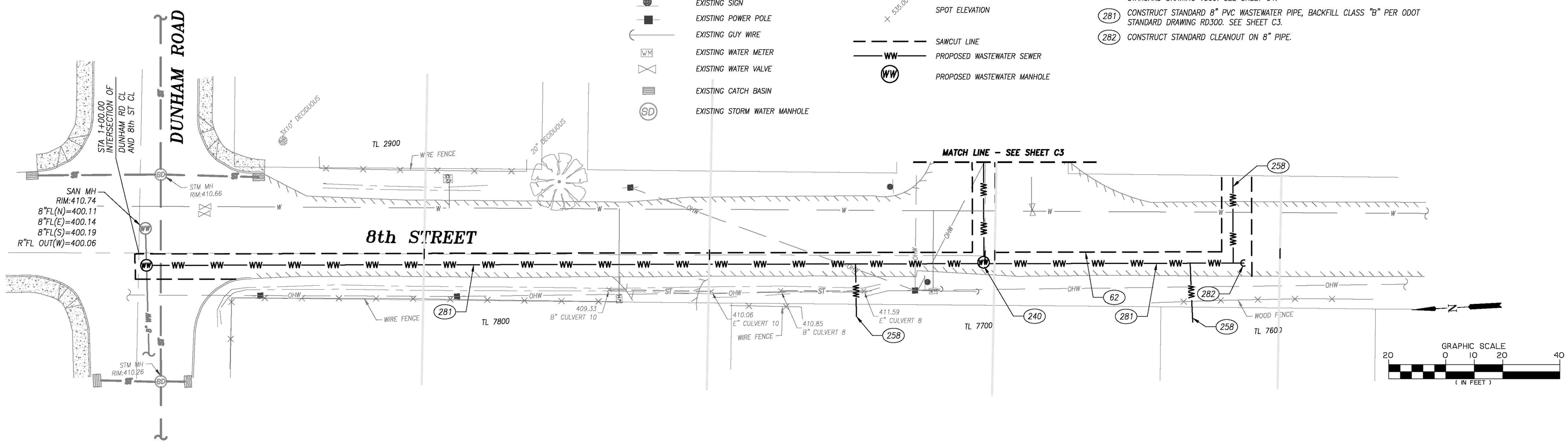

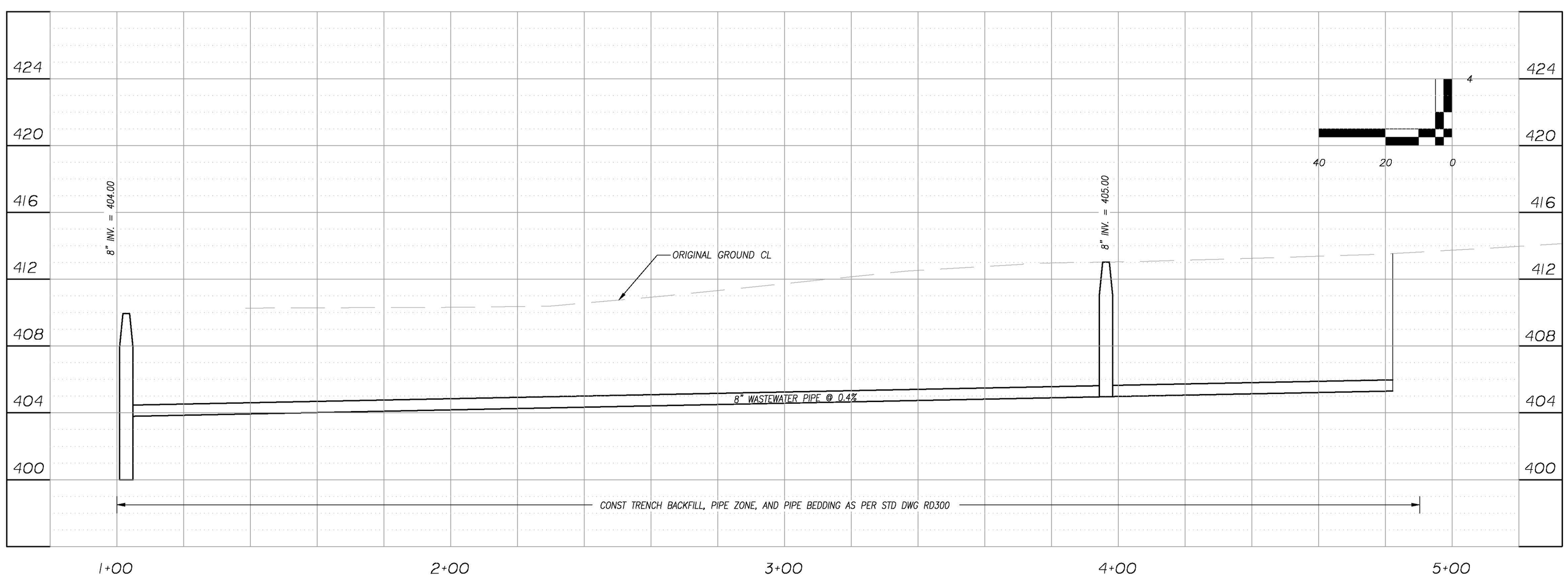

Branch ENGINEERING Inc.
Since 1977
civil • transportation
structural • geotechnical
SURVEYING
310 5th Street
Springfield, OR 97477
p: 541.746.0637
www.BranchEngineering.com
Springfield OR | Salem OR

PRELIMINARY
NOT FOR CONSTRUCTION

project title:

8th STREET SANITARY SEWER IMPROVEMENTS

CITY OF VENETA
88184 8TH STREET
VENETA, OREGON

revisions:

date:	MAY 12, 2016
drawn by:	MD
designer:	NP
project no:	14-006f

8TH STREET
SEWER PLAN
& PROFILE

sheet: C2

Z:\2014\14-006f 8th Street Sewer\drawings\14-006f 8th St SEWER.dwg 5/13/2016 3:38 PM MARISSA

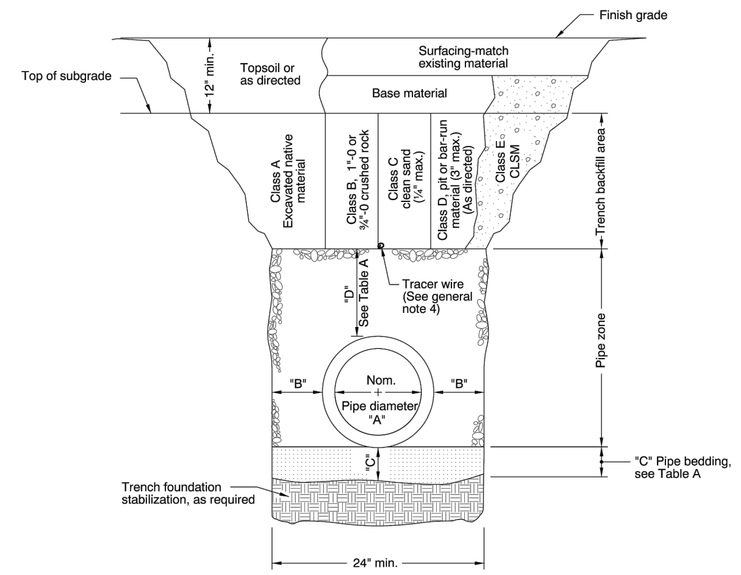

MULTIPLE INSTALLATIONS

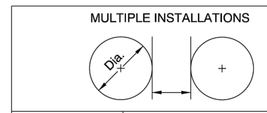

DIAMETER	MIN. SPACE BETWEEN PIPES
Up to 48"	24"
48" to 72"	One half (½) dia. of pipe

TABLE A

"A" (in)	"B" (in)	"C" (in)	"D" (in)
4	10	4	8
6	10	4	8
8	10	6	10
10	10	6	10
12	12	6	10
15	12	6	10
18	16	6	12
21	16	6	12
24	18	6	12
30	18	6	12
36	24	6	14
42	24	6	14
48	24	6	14
54	24	6	14
60	24	6	14
66	24	6	14
72	24	6	14

For pipes over 72" diameter, see general note 3.

GENERAL NOTES FOR ALL DETAILS:

1. Surfacing of paved areas shall comply with street cut Std. Drg. RD302.
2. For pipe installation in embankment areas where the trench method will not be used and the pipe is ≥ 36" diameter, increase dimension "B" to nominal pipe diameter.
3. Pipes over 72" diameter are structures, and are not applicable to this drawing.
4. See Std. Drg. RD336 for tracer wire details (When required).

CALC. BOOK NO. N/A

BASELINE REPORT DATE 14-JUL-2014

NOTE: All material and workmanship shall be in accordance with the current Oregon Standard Specifications

The selection and use of this Standard Drawing, while designed in accordance with generally accepted engineering principles and practices, is the sole responsibility of the user and should not be used without consulting a Registered Professional Engineer.

OREGON STANDARD DRAWINGS

TRENCH BACKFILL, BEDDING, PIPE ZONE AND MULTIPLE INSTALLATIONS

2015

DATE	REVISION DESCRIPTION

rd300.dgn 14-JUL-2014

RD300

Effective Date: June 1, 2016 - November 30, 2016 RD300

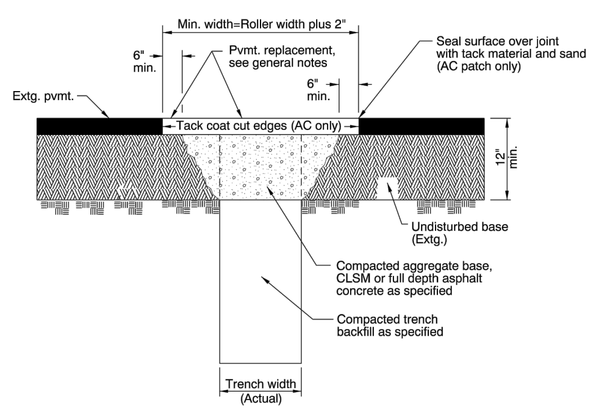

GENERAL NOTES FOR ALL DETAILS:

1. All existing AC or PCC pavement shall be sawcut prior to repaving.
2. Concrete pavement shall be replaced with concrete to a minimum thickness of 6" or to the thickness of removed pavement, whichever is greater.
3. Place AC mix minimum thkn. of 4" or the thkn. of the removed pavement, whichever is greater. Compact as specified.

CALC. BOOK NO. N/A

BASELINE REPORT DATE 12-JUN-2008

NOTE: All material and workmanship shall be in accordance with the current Oregon Standard Specifications

The selection and use of this Standard Drawing, while designed in accordance with generally accepted engineering principles and practices, is the sole responsibility of the user and should not be used without consulting a Registered Professional Engineer.

OREGON STANDARD DRAWINGS

STREET CUT

2015

DATE	REVISION DESCRIPTION

rd302.dgn 14-JUL-2014

RD302

Effective Date: June 1, 2016 - November 30, 2016 RD302

LEGEND

- EXISTING EDGE OF ASPHALT CONCRETE
- EXISTING STORM SEWER
- EXISTING WASTEWATER SEWER
- EXISTING WATERLINE
- EXISTING OVERHEAD LINES
- EXISTING FENCE
- EXISTING BOTTOM OF SWALE
- EXISTING SIGN
- EXISTING POWER POLE
- EXISTING GUY WIRE
- EXISTING WATER METER
- EXISTING WATER VALVE
- EXISTING CATCH BASIN
- EXISTING STORM WATER MANHOLE
- EXISTING WASTEWATER MANHOLE
- EXISTING ELECTRIC METER
- EXISTING CONCRETE
- EXISTING DECIDUOUS TREE
- SPOT ELEVATION
- SAWCUT LINE
- PROPOSED WASTEWATER SEWER
- PROPOSED WASTEWATER MANHOLE

CONSTRUCTION NOTES

- (62) SAWCUT AND REMOVE EXISTING PAVEMENT AND REPLACE WITH LIKE MATERIAL PER ODOT STD DWG RD302 (SEE SHEET C3). PROVIDE 3" THICKNESS OF PAVEMENT FOR PAVEMENT REPLACEMENT.
- (258) CONSTRUCT STANDARD SINGLE SEWER LATERAL AND CLEANOUT WITH 6" PIPE PER CITY STANDARD DRAWING V309. SEE SHEET C4.
- (281) CONSTRUCT STANDARD 8" PVC WASTEWATER PIPE, BACKFILL CLASS "B" PER ODOT STANDARD DRAWING RD300. SEE SHEET C3.
- (282) CONSTRUCT STANDARD CLEANOUT ON 8" PIPE.

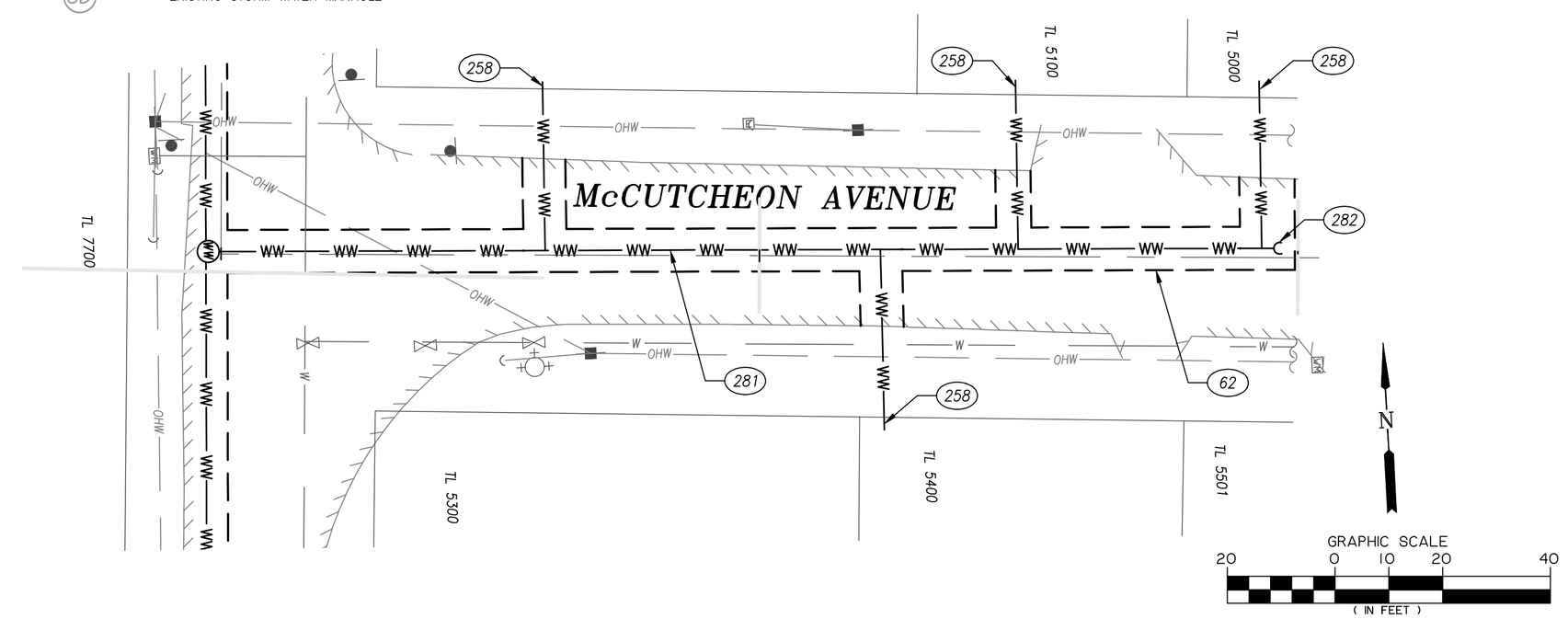

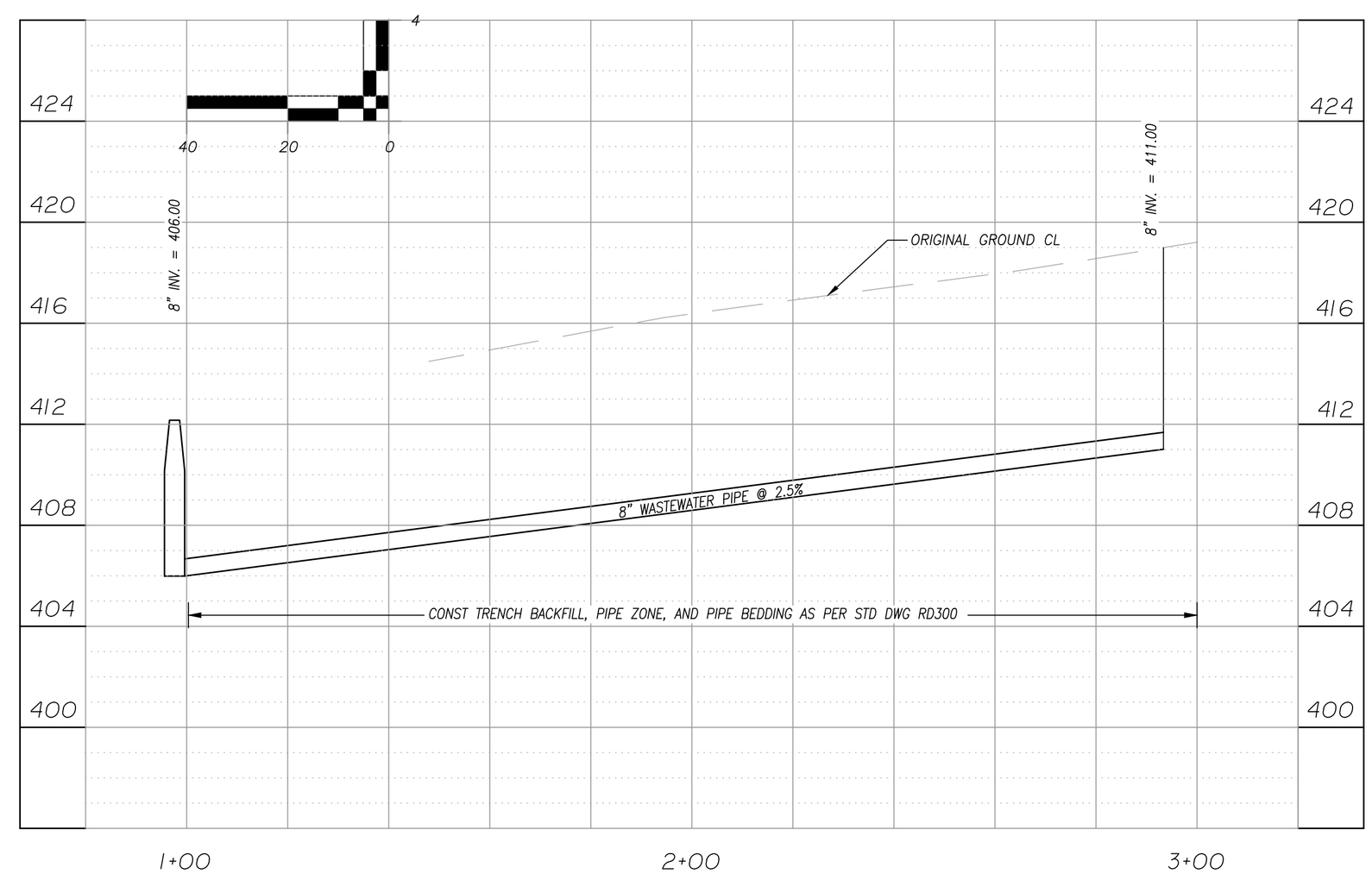

Branch ENGINEERING Inc.
Since 1977
civil • transportation
structural • geotechnical
SURVEYING
310 5th Street
Springfield, OR 97477
p: 541.746.0637
www.BranchEngineering.com
Springfield OR | Salem OR

PRELIMINARY
NOT FOR CONSTRUCTION

project title:

8th STREET SANITARY SEWER IMPROVEMENTS

CITY OF VENETA
881 84 8TH STREET
VENETA, OREGON

revisions:

date:	MAY 12, 2016
drawn by:	MD
designer:	NP
project no:	14-006f

McCUTCHEON SEWER PLAN PROFILE & DETAILS

sheet: C3

Z:\2014\14-006f 8th Street Sewer\drawings\14-006f 8th St SEWER.dwg 5/13/2016 3:39 PM MARISSA

copyright © 2016 Branch Engineering Inc.

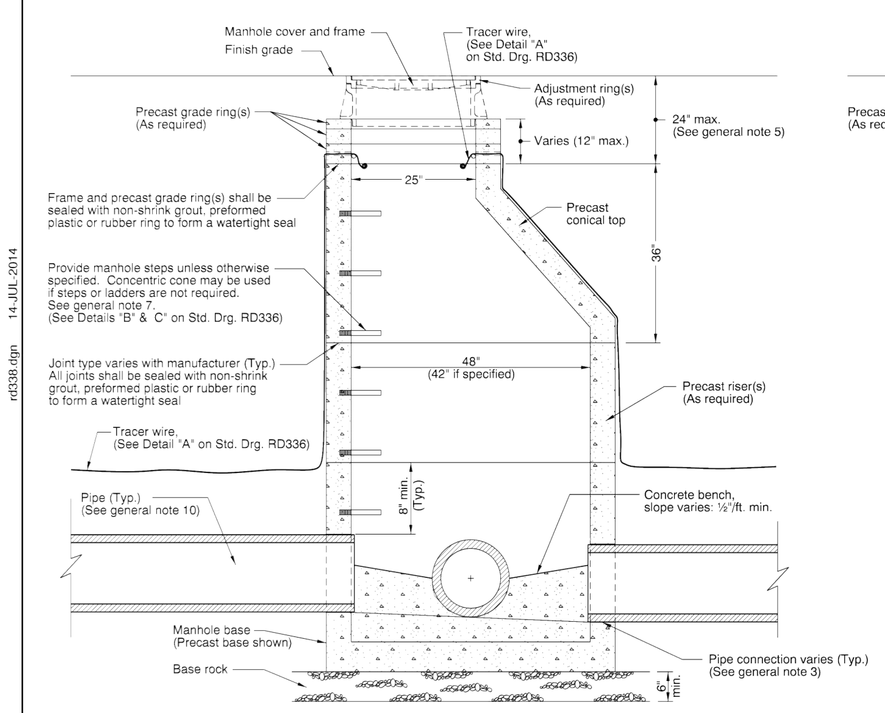

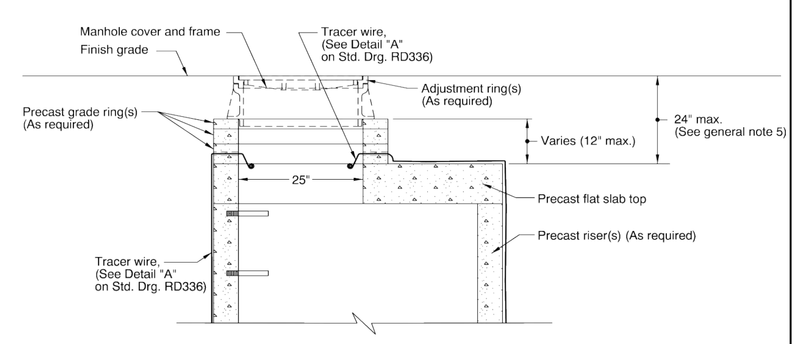

GENERAL NOTES FOR ALL DETAILS:

1. All precast products shall conform to requirements of ASTM C478.
2. Standard precast manhole section diameter shall be 48". Use 42" if specified by the Engineer.
3. See Std. Drg. RD345 for pipe to manhole connections.
4. See Std. Drg. RD344 for manhole base section.
5. Adjust 24" maximum.
6. All connecting pipes shall have a tracer wire, or approved alternate.
7. See Std. Drg. RD337 for manhole safety ladder.
8. See Std. Drg. RD336 for details not shown.
9. See Std. Drg. RD356 for manhole covers and frames, manhole adjustment rings, etc.
10. Max. pipe diameter varies with pipe material.
11. See Std. Drg. RD342 for shallow manholes.
12. Location, elevation, diameter, slope, and number of pipe(s) varies, see project plans.
13. This detail limited to interior drop of 24".
    See Std. Drgs. RD350 or RD352 for drop manhole details for drops in excess of 24".

The selection and use of this Standard Drawing, while designed in accordance with generally accepted engineering principles and practices, is the sole responsibility of the user and should not be used without consulting a Registered Professional Engineer.

CALC. BOOK NO. N/A

BASELINE REPORT DATE 14-JUL-2014

NOTE: All material and workmanship shall be in accordance with the current Oregon Standard Specifications

OREGON STANDARD DRAWINGS

STANDARD SANITARY SEWER MANHOLE

2015

DATE	REVISION DESCRIPTION

RD338 14-JUL-2014 rd338.dgn

Effective Date: June 1, 2016 - November 30, 2016 RD338

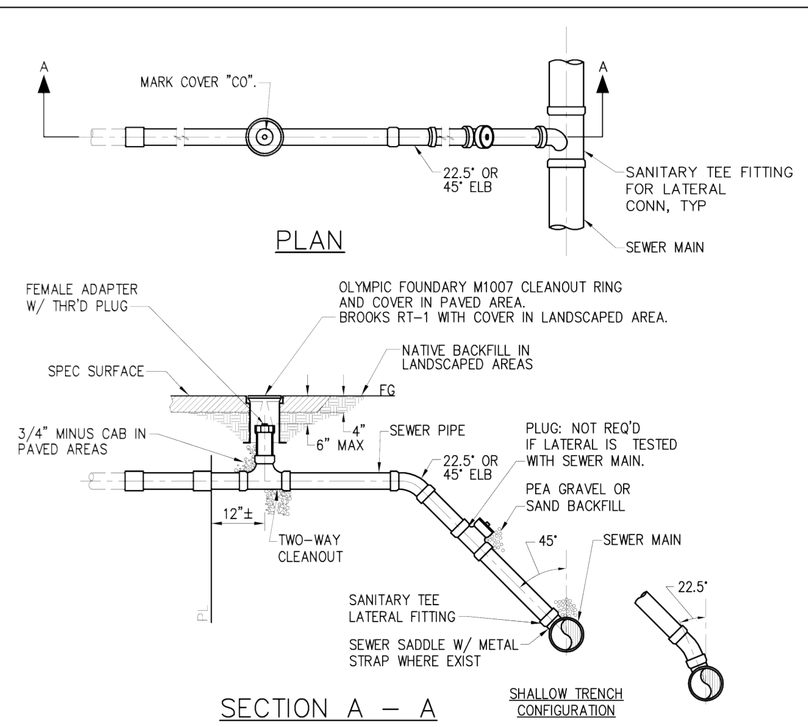

NOTES:

1. ALL CLEANOUT MATERIAL SAME AS CARRIER PIPE.
2. PIPE & FITTING SHALL BE COMPATIBLE. ONLY MANUFACTURER'S FITTING SHALL BE USED.
3. CLEANOUT REQUIRED FOR ALL NEW CONECTIONS & LATERAL REPLACEMENTS.
4. WHERE DEEP CONNECTION IS AT AN ANGLE LESS THAN 45° FROM VERTICAL DUCTILE IRON PIPE & FITTINGS SHOULD BE USED.
5. PRESSURE TEST TO PROPERTY LINE REQUIRED.
6. CLEANOUTS ARE NOT ALLOWED IN SIDEWALK. LOCATE CLEANOUTS 1' MIN. BEHIND SIDEWALK.

WEBER ELLIOTT ENGINEERS, P.C.
Eugene, OR

City of Veneta

CITY OF VENETA STANDARD DRAWING

SINGLE SEWER LATERAL

NTS | NOVEMBER 2007 | V309

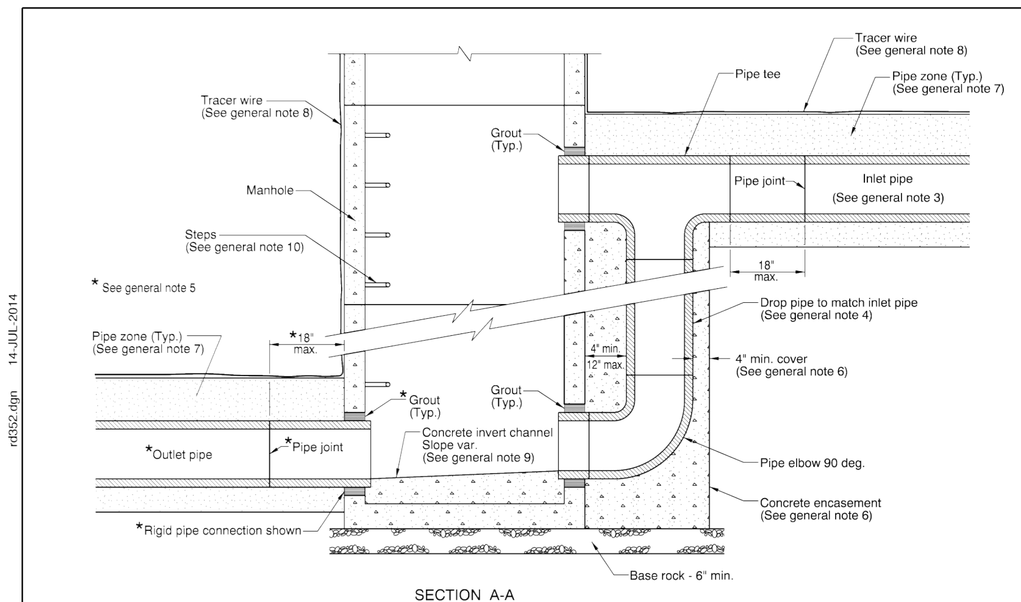

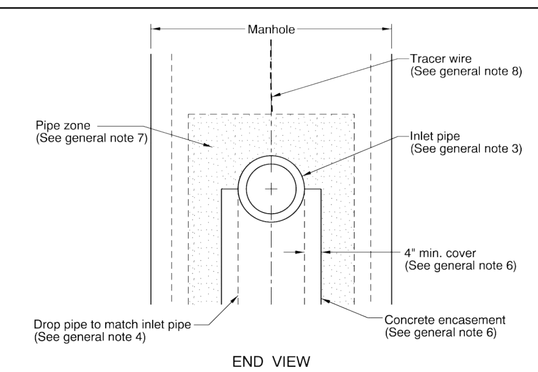

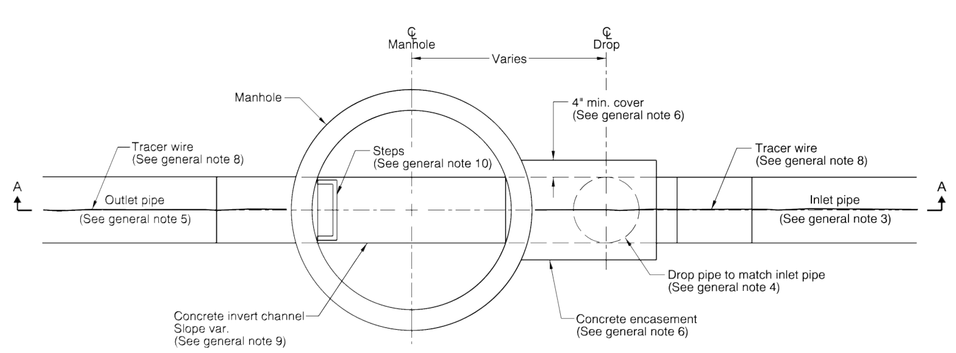

GENERAL NOTES FOR ALL DETAILS:

1. See appropriate manhole standard drawings for details not shown.
2. Location, elevation, diameter, slope, and number of pipe(s) varies, see project plans. Only 1 outside drop pipe allowed per manhole. See project plans for pipe material.
3. Inlet pipe may be rigid or flexible, maximum diameter 18". The connecting pipe shall have a flexible, gasketted and unrestrained joint within 18" of pipe tee, as shown. Joint type varies with manufacturer.
4. Drop pipe, tee, and elbow to match inlet pipe.
5. Rigid pipe connection shown. Outlet pipe(s) may be rigid or flexible, see project plans. Max. outlet pipe diameter varies with pipe material. See Std. Drg. RD345 for pipe to manhole connections.
6. Concrete encasement shall be commercial grade concrete. Provide 4" minimum cover over outer most parts of pipe and fittings.
7. Pipe zone varies, see Std. Drg. RD300.
8. All connecting pipes shall have a tracer wire, or approved alternate. See Std. Drg. RD336 for tracer wire details.
9. Invert channels shall be constructed to provide smooth slopes and radii to outlet pipe.
10. See Std. Drg. RD336 for manhole steps details.

CALC. BOOK NO. N/A

BASELINE REPORT DATE 14-JUL-2014

NOTE: All material and workmanship shall be in accordance with the current Oregon Standard Specifications

The selection and use of this Standard Drawing, while designed in accordance with generally accepted engineering principles and practices, is the sole responsibility of the user and should not be used without consulting a Registered Professional Engineer.

OREGON STANDARD DRAWINGS

OUTSIDE DROP MANHOLES

2015

DATE	REVISION DESCRIPTION

RD352 14-JUL-2014 rd352.dgn

Effective Date: June 1, 2016 - November 30, 2016 RD352

Z:\2014\14-006f 8th Street Sewer\drawings\14-006f 8th St SEWER.dwg 5/12/2016 11:02 AM MARISSA

copyright © 2016 Branch Engineering, Inc.

Branch ENGINEERING Inc
Since 1977
civil • transportation
structural • geotechnical
SURVEYING
310 5th Street
Springfield, OR 97477
p: 541.746.0637
www.BranchEngineering.com
Springfield OR | Salem OR

PRELIMINARY
NOT FOR CONSTRUCTION

project title:

8th STREET SANITARY SEWER IMPROVEMENTS

CITY OF VENETA
88184 8TH STREET
VENETA, LANE COUNTY, OREGON

revisions:

date:	MAY 5, 2016
drawn by:	MD
designer:	NP
project no:	14-006f

DETAILS

sheet: C4

ENGINEER'S REPORT

Local Improvement District
8th Street Sewer
With City Participation

For
City of Veneta
P.O. Box 458
Veneta, OR 97487

Branch ENGINEERING inc
Since 1977
civil · transportation
structural · geotechnical
SURVEYING
www.BranchEngineering.com

June 27, 2016

Contents

Page No.

Introduction 1

Project Summary 1

Construction Cost Estimate: (Estimate of Probable Cost) 2

Assessment of Unit Costs to be Applied to Each Property 3

Recommendation 3

Descriptions of Specially Benefitted Properties 4

Statement of Outstanding Assessments 4

Appendix

Description

Exhibit 1 — Project Site Map

Exhibit 2 — Construction Drawings

INTRODUCTION

This document outlines a possible Local Improvement District (LID) to extend wastewater service to multiple properties not currently connected to the City of Veneta wastewater system. This report amends the May 13, 2016 Engineer's Report to include City of Veneta participation for the downstream pipe segment.

The benefits of a project like this include a reduction in potential risks to groundwater contamination from septic tanks and their maintenance, and it ensures compliance with the City's sewer ordinance for wastewater connection. It also provides an opportunity for the benefited properties to share in the cost of the improvements.

The proposed LID will extend gravity sewer service to seven tax lots totaling 2.34 acres located near the 8th Street/McCutcheon intersection. The project includes approximately 560 feet of 8-inch sewer pipe, 210 feet of 6-inch sewer pipe, two manholes, and cleanouts (see Exhibit 1 in the Appendix).

A Local Improvement District is a method by which a group of property owners can share in the cost of infrastructure improvements. If an LID is formed, the City manages the design and construction of the project, and property owners do not pay until the work is complete. The improvements can also be completed under a permit job, in which case the project is privately managed and financed up front by property owners.

Veneta Municipal Code 3.10.020 requires the following elements to be included in an improvement district report:

- A map showing the general nature and extent of the improvements
- Estimates of the work to be done
- An estimate of probable cost
- An estimate of unit costs attributable to benefited properties
- A recommendation as to the method of assessment that allocates a fair apportionment of benefited properties
- Descriptions of specially benefited properties
- A statement of outstanding assessments

In accordance with Municipal Code Chapter 3.10.040, the council shall by resolution:

1. Designate the proposed improvements
2. Declare its intention to make such improvements
3. Provide the manner and method for carrying out the improvements
4. Direct the city recorder to schedule a public hearing regarding the proposed improvements and provide the required notice

PROJECT SUMMARY

The properties selected for the LID are currently not served by public sewer and require significant off-site improvements to gain sewer service. The proposed LID boundary (as illustrated in Exhibit 1) includes seven tax lots totaling an area of 2.34 acres. Each lot will be provided with a single lateral.

The proposed improvements include extending an 8-inch public gravity sewer pipe in 8th Street from Hunter to just south of McCutcheon, and an 8-inch pipe in McCutcheon from 8th Street to approximately 180 feet

east. Also, a 6-inch diameter sewer lateral will be constructed to the edge of the adjacent right-of-way for each of the seven benefited tax lots.

The portion of the project identified as City of Veneta participation is all improvements downstream of the first sewer lateral. This includes a new manhole at Dunham and the most northern 175 feet of 8-inch pipe. The remainder of the project will be funded by the LID.

Preliminary construction plans have been completed for the project and are included in the Appendix. An estimate of probable cost has been generated for the proposed improvements, and is as follows:

ESTIMATE OF PROBABLE PROJECT COST

Item No.	Description	Estimated Quantity	Unit	Unit Cost	Price
LID					
1	**Mobilization, Bonds and Insurance**	1	Lump Sum	$6,990.00	$6,990
2	**Erosion Control**	1	Lump Sum	$1,500.00	$1,500
3	**Traffic Control**	1	Lump Sum	$3,500.00	$3,500
4	**8" Wastewater Pipe (10'+/- Depth)**	385	Lineal Feet	$80.00	$30,800
5	**6" Wastewater (Laterals)**	210	Lineal Feet	$70.00	$14,700
6	**Wastewater Cleanout**	2	Each	$500.00	$1,000
7	**Wastewater Manhole**	1	Each	$5,000.00	$5,000
8	**HMAC Trench Patch**	80	Ton	$130.00	$10,400
9	**Landscape Restoration**	1	Lump Sum	$3,000.00	$3,000
Construction Cost					$76,890
City Administrative & Legal Costs					$3,200
Surveying/Testing (2%)					$1,538
Engineering (10%)					$7,689
LID Participation					$89,317
				Contingency (15%)	$13,398
				Total LID Cost	$102,714
City					
1	**Mobilization, Bonds and Insurance**	1	Lump Sum	$2,490.00	$2,490
2	**Erosion Control**	1	Lump Sum	$500.00	$500
3	**Traffic Control**	1	Lump Sum	$1,500.00	$1,500
4	**8" Wastewater Pipe (10'+/- Depth)**	175	Lineal Feet	$80.00	$14,000
5	**Wastewater Manhole**	1	Each	$5,000.00	$5,000
6	**HMAC Trench Patch**	30	Ton	$130.00	$3,900
Construction Cost					$27,390
Surveying/Testing (2%)					$548
Engineering (10%)					$2,739
Total City Participation					$30,677
				Contingency (15%)	$4,602
				Total City Cost	$35,278
					$119,994
				Construction Cost (With Contingency) Total	**$137,993**

ASSESSMENT OF UNIT COSTS TO BE APPLIED TO EACH PROPERTY

Veneta Municipal Code, Section 3.10.020 requires that the method of assessment include all benefited property and that it is a fair apportionment, all of which is to be approved by the Council. The Council may also modify the assessment method, or use other means for financing.

The assessment apportioned to each parcel is based on the cost per acre of benefited property (to the nearest hundredth of an acre), as collected from the Lane County Database. The unit cost was determined by dividing the total system cost by the total improvement district area per Veneta Municipal Code section 3.10.090(4)(d)(i).

ESTIMATE OF UNIT COSTS TO BENEFITED PROPERTIES						
Assessor's Map	Tax Lot	Owner's Mailing Address	Owner Name	Lot Area (Acre)	Percent of LID Area	2016 Projected LID Cost per Lot
17063613	7600	88138 8th Street	McAdams, Julilah L & Troy A	0.38	16.24%	$16,495
	7700	88138 8th Street	McAdams, Julilah L & Troy A	0.75	32.05%	$32,973
	5000	24857 McCutcheon Ave	Konnie, Patti Lee & Noble, Gary M	0.12	5.13%	$5,448
	5100	24857 McCutcheon Ave	Konnie, Patti Lee & Noble, Gary M	0.12	5.13%	$5,448
	5200	PO Box 97, Veneta	Sullivan, Margarat A	0.25	10.68%	$10,897
	5300	27725 Royal Ave, Eugene	Louie, Jack H	0.56	23.93%	$24,431
	5400	90266 Sheffler Rd, Elmira	Gary Raze	0.16	6.84%	$7,022
Total				**2.34**	**100%**	**$102,714**

RECOMMENDATION

It is our recommendation that the LID assessment be based on the cost per acreage of benefited property per current City Municipal code per Veneta Municipal Code.

The 8th Street sewer improvements will reduce potential risks to groundwater contamination from septic tanks and their maintenance and also ensure compliance with the City's sewer ordinance for wastewater connection. The cost of the project is significant to the benefited properties; however, due to limited available service options and funding opportunities, the 8th Street Sewer LID provides an opportunity for property owners to share in the cost of providing sewer to the area.

DESCRIPTIONS OF SPECIALLY BENEFITED PROPERTIES

As mentioned earlier, the assessed value of the project was distributed to those properties in the LID based on acreage of benefited property. For additional information, refer to the City of Veneta Municipal Code 3.10.090(4)(d)(i)

STATEMENT OF OUTSTANDING ASSESSMENTS

At this time no outstanding assessments have been identified. If any are discovered, the City will be notified to approach the issue accordingly.

Exhibit 1

Project Site Map

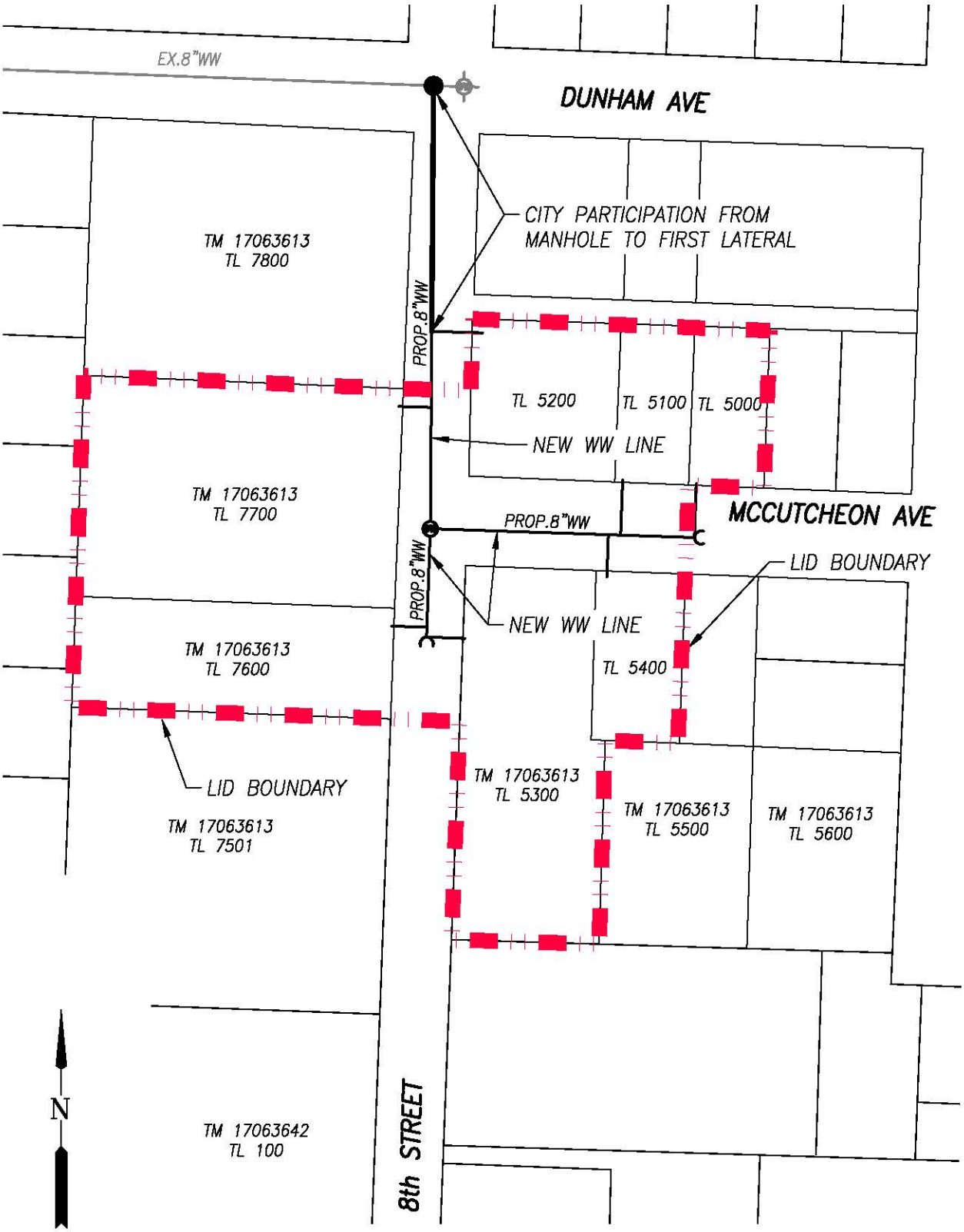

SCALE: 1" = 100'

EXHIBIT 1

Branch ENGINEERING Inc. Since 1977

8th STREET SEWER SERVICE AREA

SITE MAP

Veneta, OR

JUNE 27, 2016

310 5th Street, Springfield OR 97477 | p: 541.746.0637 | www.branchengineering.com

Project No:14-006f

Z:\2014\14-006f 8th Street Sewer\14-006e Map_LIDExhibit_CityPart_062716.dwg 6/27/2016 10:25 AM NATHAN

Exhibit 2

Construction Drawings

8th STREET SANITARY SEWER

BETWEEN DUNHAM AVE AND McCUTCHEON AVE
CITY OF VENETA, OREGON

EROSION CONTROL NOTES

A. USE PROTECTIVE MEASURES TO PREVENT DEBRIS FROM ENTERING STORM SYSTEM. PROTECT DOWNSTREAM CATCH BASINS OR ANY OTHER STORM WATER INLET WITH BIO-BAGS DURING CONSTRUCTION.

B. ALL WASTE MATERIAL ASSOCIATED WITH THIS PROJECT SHALL BE PICKED UP AND DISPOSED OF ACCORDING TO APPLICABLE STATE, FEDERAL AND LOCAL REGULATIONS.

C. SCHEDULE STREET CLEANING AND END OF PROJECT OR AS DIRECTED BY THE CITY OF VENETA.

RESTORATION NOTES

A. RESTORE OR REPLACE ANY DISTURBED LANDSCAPING OF ADJACENT PROPERTIES TO NEW OR BETTER CONDITIONS.

B. DAMAGE TO PROPERTY BOTH PUBLIC AND PRIVATE DUE TO CONSTRUCTION ACTIVITIES SHALL BE REPAIRED OR REPLACED AT CONTRACTORS EXPENSE.

UTILITY NOTES

ATTENTION: OREGON LAW REQUIRES YOU TO FOLLOW RULES ADOPTED BY THE OREGON UTILITY NOTIFICATION CENTER. THOSE RULES ARE SET FORTH IN OAR 952-001-0001 THROUGH 952-001-0090. YOU MAY OBTAIN COPIES OF THE RULES BY CALLING THE CENTER AT (503) 232-1987 OR VISITING THEIR WEBS SITE AT WWW.DIGSAFELYOREGON.COM

CALL THE TOLL FREE "ONE-CALL" NUMBER AT 800-332-2344 OR 811 FOR LOCATES AT LEAST TWO DAYS IN ADVANCE OF EXCAVATION.

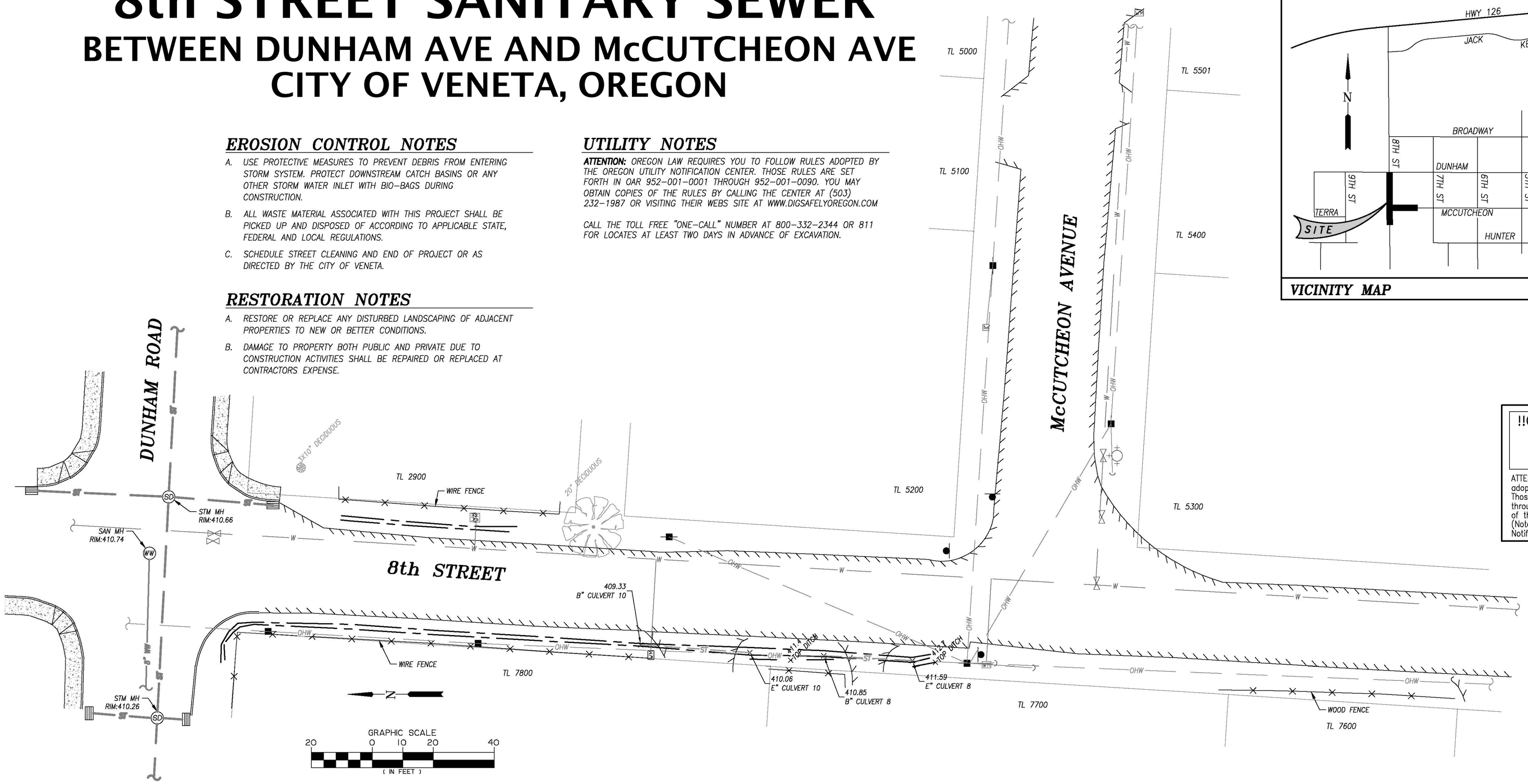

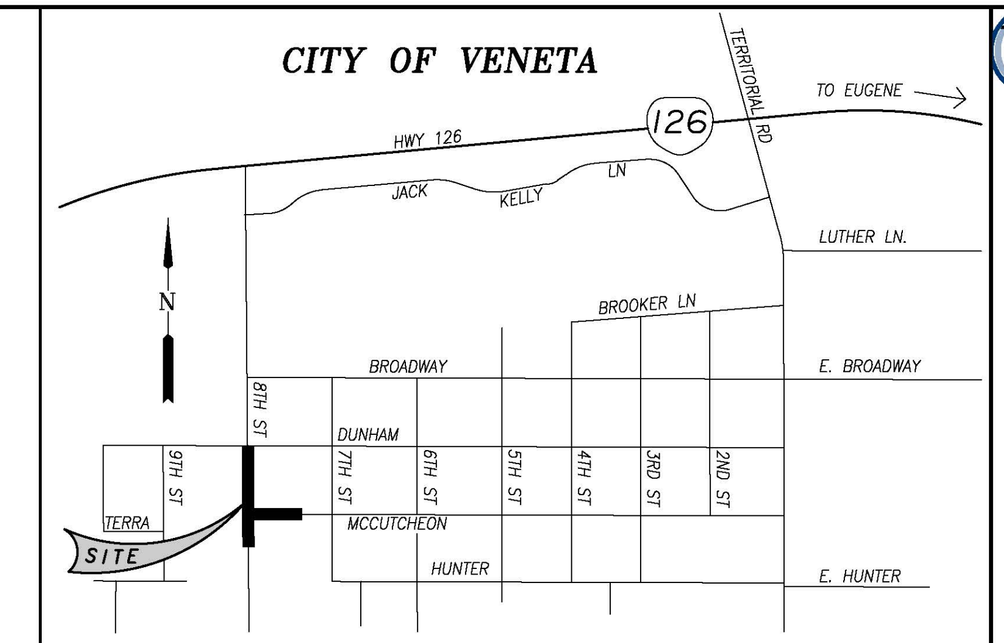

VICINITY MAP — NOT TO SCALE

!!CALL BEFORE YOU DIG!!
1-800-332-2344
TWO WORK DAYS IN ADVANCE OF EXCAVATION

ATTENTION:Oregon law requires you to follow rules adopted by the Oregon Utility Notification Center. Those rules are set forth in OAR 952-001-0010 through OAR 952-001-0090. You may obtain copies of the rules by calling the center. (Note: the telephone number for the Oregon Utility Notification Center is (503)232-1987).

LEGEND - EXISTING

- EDGE OF ASPHALT CONCRETE
- STORM SEWER
- WASTEWATER SEWER
- WATERLINE
- OVERHEAD LINES
- FENCE
- BOTTOM OF SWALE
- SIGN
- POWER POLE
- GUY WIRE
- WATER METER
- WATER VALVE
- CATCH BASIN
- STORM WATER MANHOLE
- WASTEWATER MANHOLE
- ELECTRIC METER
- CONCRETE
- DECIDUOUS TREE
- SPOT ELEVATION
- BUILDING

NOTES

1. THIS DOES NOT CONSTITUTE A BOUNDARY SURVEY AND IS SUBJECT TO ANY INACCURACIES A SUBSEQUENT SURVEY MAY DISCLOSE.
2. LOCATIONS OF UNDERGROUND UTILITIES SHOWN ARE BASED ON A COMBINATION OF VISIBLE FACILITIES LOCATED ABOVE GROUND AND UTILITY LOCATE MARKS. NO CERTIFICATION IS MADE TO ACTUAL LOCATION OF UNDERGROUND UTILITIES.

GENERAL NOTES

1. CONSTRUCTION SHALL CONFORM TO THE OREGON STANDARD SPECIFICATIONS FOR CONSTRUCTION AND THE OREGON STANDARD DRAWINGS. WHERE VENETA STANDARD DRAWINGS ARE REFERENCED AND APPLICABLE TO THE CONSTRUCTION, VENETA STANDARDS SHALL APPLY.
2. ALL MATERIAL AND EQUIPMENT SHOWN HEREON IS SUBJECT TO REVIEW AND APPROVAL BY THE CITY. THE CONTRACTOR SHALL APPROVE AND PROVIDE THREE COPIES OF CATALOGUE CUT SHEETS FOR ALL MATERIAL AND EQUIPMENT TO BE INSTALLED ON THE PROJECT TO THE CITY ENGINEER. ALLOW A MINIMUM OF 10 DAYS FOR CITY ENGINEER REVIEW OF SUBMITTALS.
3. WORK SHALL NOT BE PERFORMED WITHOUT CITY INSPECTIONS. A MINIMUM 48-HOUR ADVANCE NOTICE OF REQUIRED INSPECTIONS IS REQUIRED. THE FOLLOWING ARE MINIMUM INSPECTION REQUIREMENTS:
   a. TV INSPECTIONS OF ALL SEWER AND DRAINAGE PIPING.
   b. HYDROSTATIC TESTING, DEFLECTION TESTING AND MANHOLE TESTING OF ALL SANITARY SEWER ELEMENTS.
4. CONTRACTOR SHALL FOLLOW RULES ADOPTED BY THE OREGON UTILITY NOTIFICATION CENTER REGARDING THE REQUIREMENTS FOR UTILITY LOCATES (OAR 952-001-0090). COPIES ARE AVAILABLE AT 1-800-332-2344.
5. THE CONTRACTOR SHALL PROTECT AND REPLACE ALL DISTURBED VEGETATION, FENCING AND OTHER IMPROVEMENTS ON PRIVATE PROPERTY.
6. CONTRACTOR SHALL PROVIDE AND MAINTAIN ACCESS TO EXISTING RESIDENTS DURING CONSTRUCTION.
7. ACCESS TO EXISTING FIRE HYDRANTS SHALL BE MAINTAINED THROUGHOUT CONSTRUCTION.
8. CONTRACTOR IS EXPECTED TO ACTIVELY ENGAGE IN EROSION CONTROL MEASURES TO MINIMIZE THE TRANSPORT OF SEDIMENT AND SOILS FROM THE CONSTRUCTION SITE. ACTIVE ENGAGEMENT SHALL MEAN THAT ALL EROSION CONTROL METHODS ARE MAINTAINED AND THAT THE FACILITIES ARE ROUTINELY INSPECTED FOR COMPLIANCE WITH ACCEPTED EROSION CONTROL PRACTICES.
9. ALL MANHOLES SHALL BE 48" INTERIOR DIAMETER. CONSTRUCT PER RD338. ALL MANHOLES SHALL RECEIVE A SEALANT COAT AS SPECIFIED.
10. SANITARY SEWER LATERALS WHERE SHOWN SHALL BE BROUGHT FROM THE SANITARY TEE FITTING AT A MAXIMUM GRADE OF 2% TO THE PROPERTY LINE.
11. FOR TREES MARKED FOR PROTECTION CONTRACTOR SHALL PROVIDE ORANGE PROTECTION FENCING AT DRIP LINE OF TREE.
12. FINAL LOCATION OF ALL LATERALS SHALL BE SET IN THE FIELD AT THE TIME OF CONSTRUCTION. CONTRACTOR MAY NEED TO ADJUST LOCATIONS BASED UPON FINAL FIELD STAKING.
13. CONTRACTOR SHALL KEEP ALL WORK WITHIN ESTABLISHED R-O-W. PRIVATE PROPERTY MAY NOT BE USED FOR MATERIAL STORAGE, EQUIPMENT OR STAGING UNLESS WRITTEN APPROVAL BY THE PROPERTY OWNER IS PROVIDED TO THE CITY.

PROJECT TEAM

CITY: KYLE SCHAUER, PUBLIC WORKS DIRECTOR, CITY OF VENETA, 88184 8TH STREET, PO BOX 458, VENETA, OR 97487, PH: (541) 935-2191, EMAIL: kschauer@ci.veneta.or.us

ENGINEER: LANE BRANCH, P.E., BRANCH ENGINEERING, INC., 310 5TH STREET, SPRINGFIELD, OREGON 97477-4643, PH: (541) 746-0637, EMAIL: laneb@branchengineering.com

SURVEYOR: DAN NELSON, P.L.S., BRANCH ENGINEERING, INC., 310 5TH STREET, SPRINGFIELD, OREGON 97477-4643, PH: (541) 746-0637, EMAIL: dann@branchengineering.com

SHEET INDEX

C1 NOTES & EXISTING CONDITIONS
C2 SEWER PLAN & PROFILE
C3 PROFILE & DETAILS
C4 DETAILS

Branch ENGINEERING Inc.
Since 1977
civil • transportation
structural • geotechnical
SURVEYING
310 Fifth Street
Springfield, OR 97477
p: 541.746.0637
www.BranchEngineering.com
Springfield OR | Salem OR

PRELIMINARY
NOT FOR CONSTRUCTION

project title:

8th STREET SANITARY SEWER IMPROVEMENTS
CITY OF VENETA
88184 8TH STREET
VENETA, OREGON

revisions:

date:	MAY 12, 2016
drawn by:	MD
designer:	NP
project no:	14-006f

NOTES & EXISTING CONDITIONS

sheet: C1

Z:\2014\14-006f 8th Street Sewer\Drawings\14-006f Existing Conditions.dwg 5/12/2016 10:41 AM MARISSA

copyright © 2016 Branch Engineering, Inc.

LEGEND

- EXISTING EDGE OF ASPHALT CONCRETE
- EXISTING STORM SEWER
- EXISTING WASTEWATER SEWER
- EXISTING WATERLINE
- EXISTING OVERHEAD LINES
- EXISTING FENCE
- EXISTING BOTTOM OF SWALE
- EXISTING SIGN
- EXISTING POWER POLE
- EXISTING GUY WIRE
- EXISTING WATER METER
- EXISTING WATER VALVE
- EXISTING CATCH BASIN
- EXISTING STORM WATER MANHOLE
- EXISTING WASTEWATER MANHOLE
- EXISTING ELECTRIC METER
- EXISTING CONCRETE
- EXISTING DECIDUOUS TREE
- SPOT ELEVATION
- SAWCUT LINE
- PROPOSED WASTEWATER SEWER
- PROPOSED WASTEWATER MANHOLE

CONSTRUCTION NOTES

62 SAWCUT AND REMOVE EXISTING PAVEMENT AND REPLACE WITH LIKE MATERIAL PER ODOT STD DWG RD302 (SEE SHEET C3). PROVIDE 3" THICKNESS OF PAVEMENT FOR PAVEMENT REPLACEMENT.

240 CONSTRUCT STANDARD WASTEWATER MANHOLE PER ODOT STANDARD DRAWING RD338. SEE SHEET C4.

244 CONSTRUCT OUTSIDEDROP WASTEWATER MANHOLE PER ODOT STANDARD DRAWING RD352. SEE SHEET C4.

258 CONSTRUCT STANDARD SINGLE SEWER LATERAL AND CLEANOUT WITH 6" PIPE PER CITY STANDARD DRAWING V309. SEE SHEET C4.

281 CONSTRUCT STANDARD 8" PVC WASTEWATER PIPE, BACKFILL CLASS "B" PER ODOT STANDARD DRAWING RD300. SEE SHEET C3.

282 CONSTRUCT STANDARD CLEANOUT ON 8" PIPE.

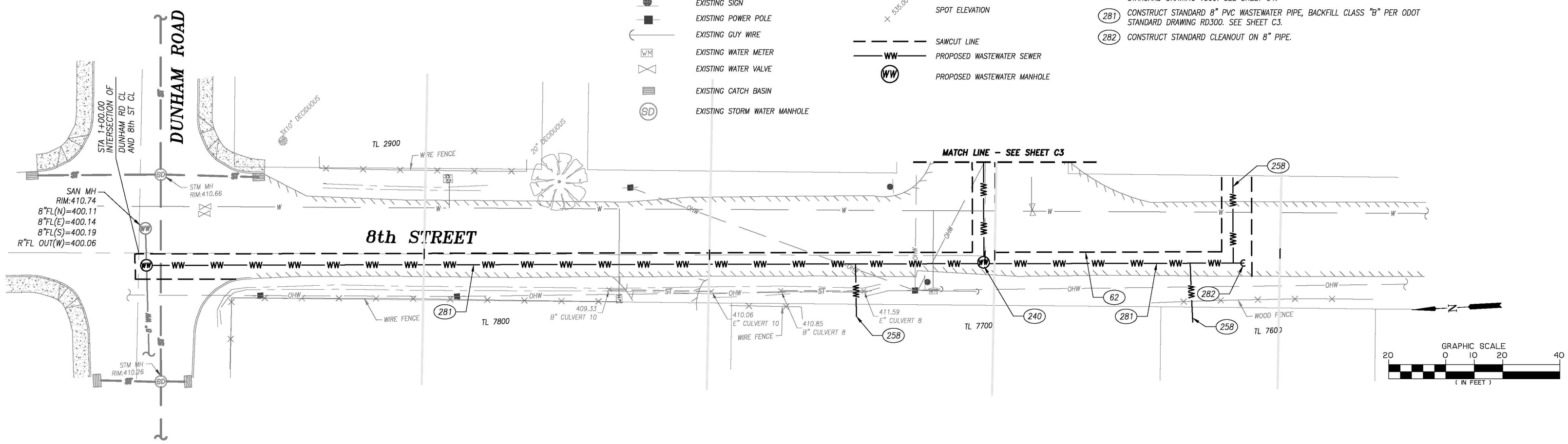

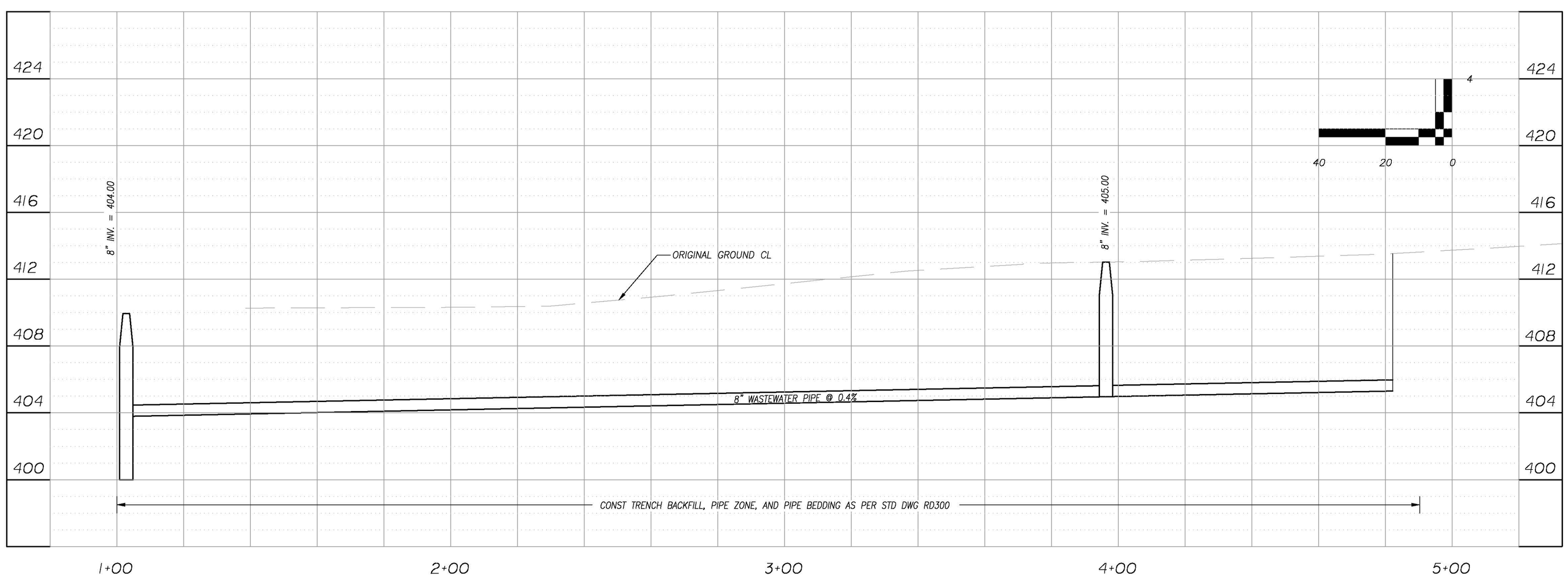

Branch ENGINEERING Inc.
Since 1977
civil • transportation
structural • geotechnical
SURVEYING
310 5th Street
Springfield, OR 97477
p: 541.746.0637
www.BranchEngineering.com
Springfield OR | Salem OR

PRELIMINARY
NOT FOR CONSTRUCTION

project title:

8th STREET SANITARY SEWER IMPROVEMENTS

CITY OF VENETA
88184 8TH STREET
VENETA, OREGON

revisions:

date:	MAY 12, 2016
drawn by:	MD
designer:	NP
project no:	14-006f

8TH STREET
SEWER PLAN
& PROFILE

sheet: C2

Z:\2014\14-006f 8th Street Sewer\drawings\14-006f 8th St SEWER.dwg 5/13/2016 3:38 PM MARISSA

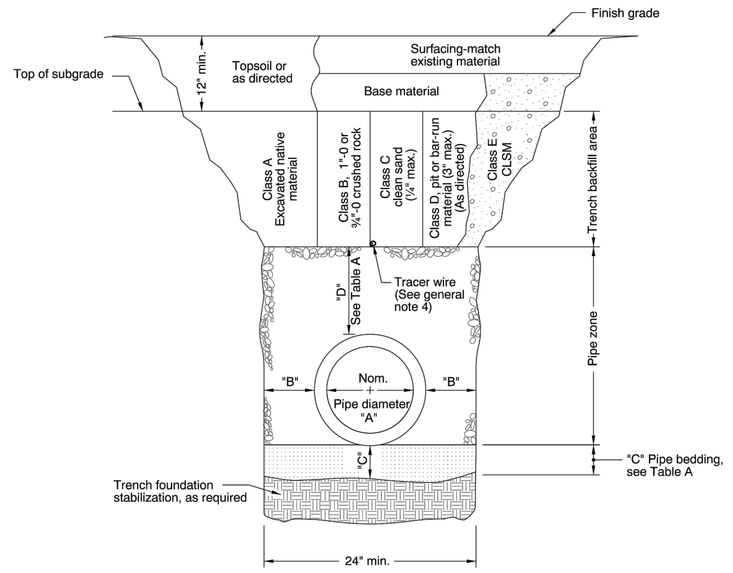

MULTIPLE INSTALLATIONS

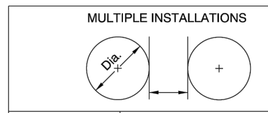

DIAMETER	MIN. SPACE BETWEEN PIPES
Up to 48"	24"
48" to 72"	One half (½) dia. of pipe

TABLE A

"A" (in)	"B" (in)	"C" (in)	"D" (in)
4	10	4	8
6	10	4	8
8	10	6	10
10	10	6	10
12	12	6	10
15	12	6	10
18	16	6	12
21	16	6	12
24	18	6	12
30	18	6	12
36	24	6	14
42	24	6	14
48	24	6	14
54	24	6	14
60	24	6	14
66	24	6	14
72	24	6	14

For pipes over 72" diameter, see general note 3.

GENERAL NOTES FOR ALL DETAILS:

1. Surfacing of paved areas shall comply with street cut Std. Drg. RD302.
2. For pipe installation in embankment areas where the trench method will not be used and the pipe is ≥ 36" diameter, increase dimension "B" to nominal pipe diameter.
3. Pipes over 72" diameter are structures, and are not applicable to this drawing.
4. See Std. Drg. RD336 for tracer wire details (When required).

CALC. BOOK NO. N/A

BASELINE REPORT DATE 14-JUL-2014

NOTE: All material and workmanship shall be in accordance with the current Oregon Standard Specifications

The selection and use of this Standard Drawing, while designed in accordance with generally accepted engineering principles and practices, is the sole responsibility of the user and should not be used without consulting a Registered Professional Engineer.

OREGON STANDARD DRAWINGS

TRENCH BACKFILL, BEDDING, PIPE ZONE AND MULTIPLE INSTALLATIONS

2015

DATE	REVISION DESCRIPTION

rd300.dgn 14-JUL-2014

RD300

Effective Date: June 1, 2016 - November 30, 2016 RD300

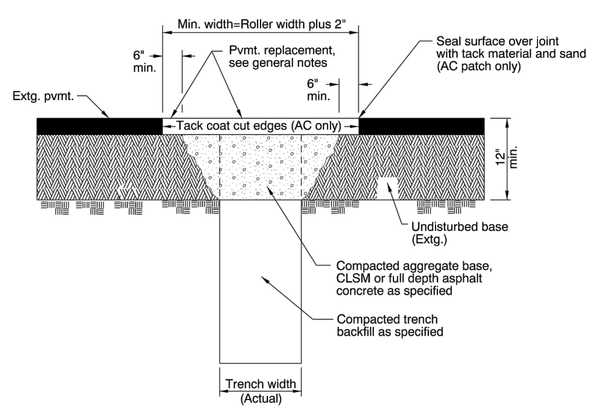

GENERAL NOTES FOR ALL DETAILS:

1. All existing AC or PCC pavement shall be sawcut prior to repaving.
2. Concrete pavement shall be replaced with concrete to a minimum thickness of 6" or to the thickness of removed pavement, whichever is greater.
3. Place AC mix minimum thkn. of 4" or the thkn. of the removed pavement, whichever is greater. Compact as specified.

CALC. BOOK NO. N/A

BASELINE REPORT DATE 12-JUN-2008

NOTE: All material and workmanship shall be in accordance with the current Oregon Standard Specifications

The selection and use of this Standard Drawing, while designed in accordance with generally accepted engineering principles and practices, is the sole responsibility of the user and should not be used without consulting a Registered Professional Engineer.

OREGON STANDARD DRAWINGS

STREET CUT

2015

DATE	REVISION DESCRIPTION

rd302.dgn 14-JUL-2014

RD302

Effective Date: June 1, 2016 - November 30, 2016 RD302

LEGEND

- EXISTING EDGE OF ASPHALT CONCRETE
- EXISTING STORM SEWER
- EXISTING WASTEWATER SEWER
- EXISTING WATERLINE
- EXISTING OVERHEAD LINES
- EXISTING FENCE
- EXISTING BOTTOM OF SWALE
- EXISTING SIGN
- EXISTING POWER POLE
- EXISTING GUY WIRE
- EXISTING WATER METER
- EXISTING WATER VALVE
- EXISTING CATCH BASIN
- EXISTING STORM WATER MANHOLE
- EXISTING WASTEWATER MANHOLE
- EXISTING ELECTRIC METER
- EXISTING CONCRETE
- EXISTING DECIDUOUS TREE
- SPOT ELEVATION
- SAWCUT LINE
- PROPOSED WASTEWATER SEWER
- PROPOSED WASTEWATER MANHOLE

CONSTRUCTION NOTES

(62) SAWCUT AND REMOVE EXISTING PAVEMENT AND REPLACE WITH LIKE MATERIAL PER ODOT STD DWG RD302 (SEE SHEET C3). PROVIDE 3" THICKNESS OF PAVEMENT FOR PAVEMENT REPLACEMENT.

(258) CONSTRUCT STANDARD SINGLE SEWER LATERAL AND CLEANOUT WITH 6" PIPE PER CITY STANDARD DRAWING V309. SEE SHEET C4.

(281) CONSTRUCT STANDARD 8" PVC WASTEWATER PIPE, BACKFILL CLASS "B" PER ODOT STANDARD DRAWING RD300. SEE SHEET C3.

(282) CONSTRUCT STANDARD CLEANOUT ON 8" PIPE.

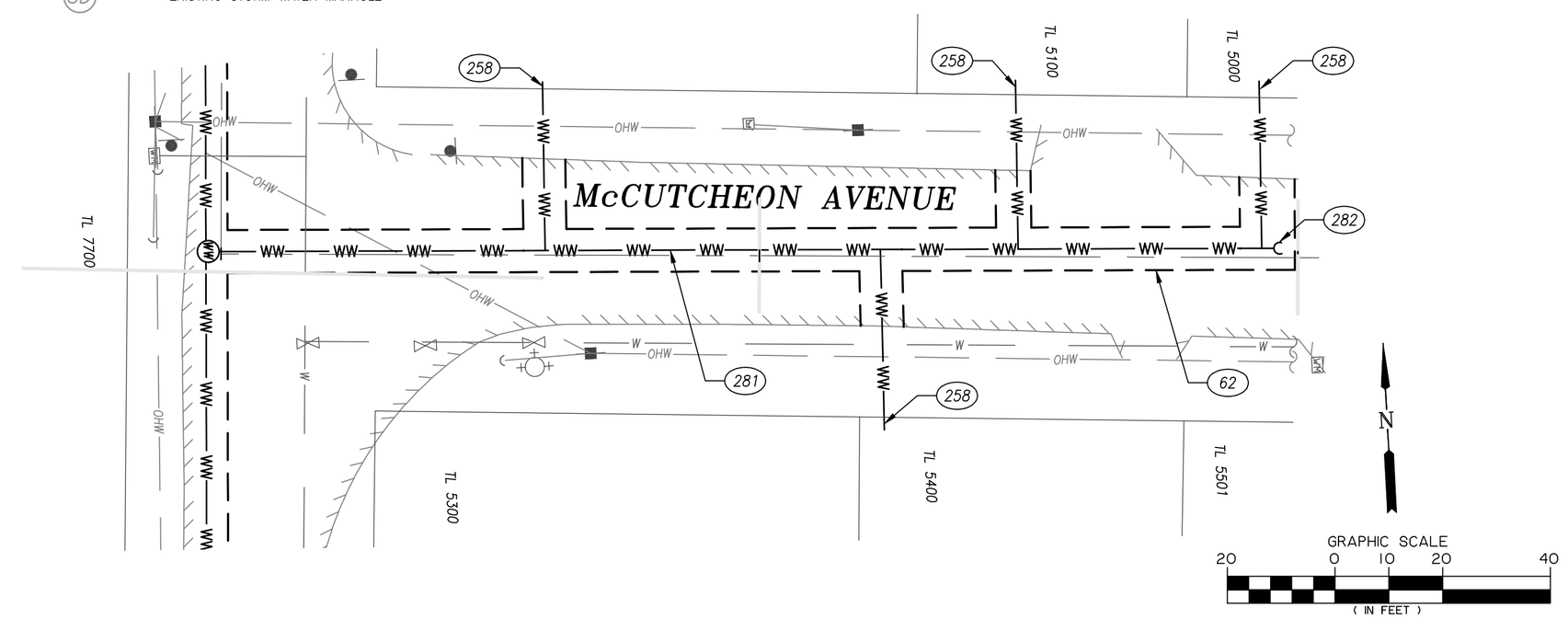

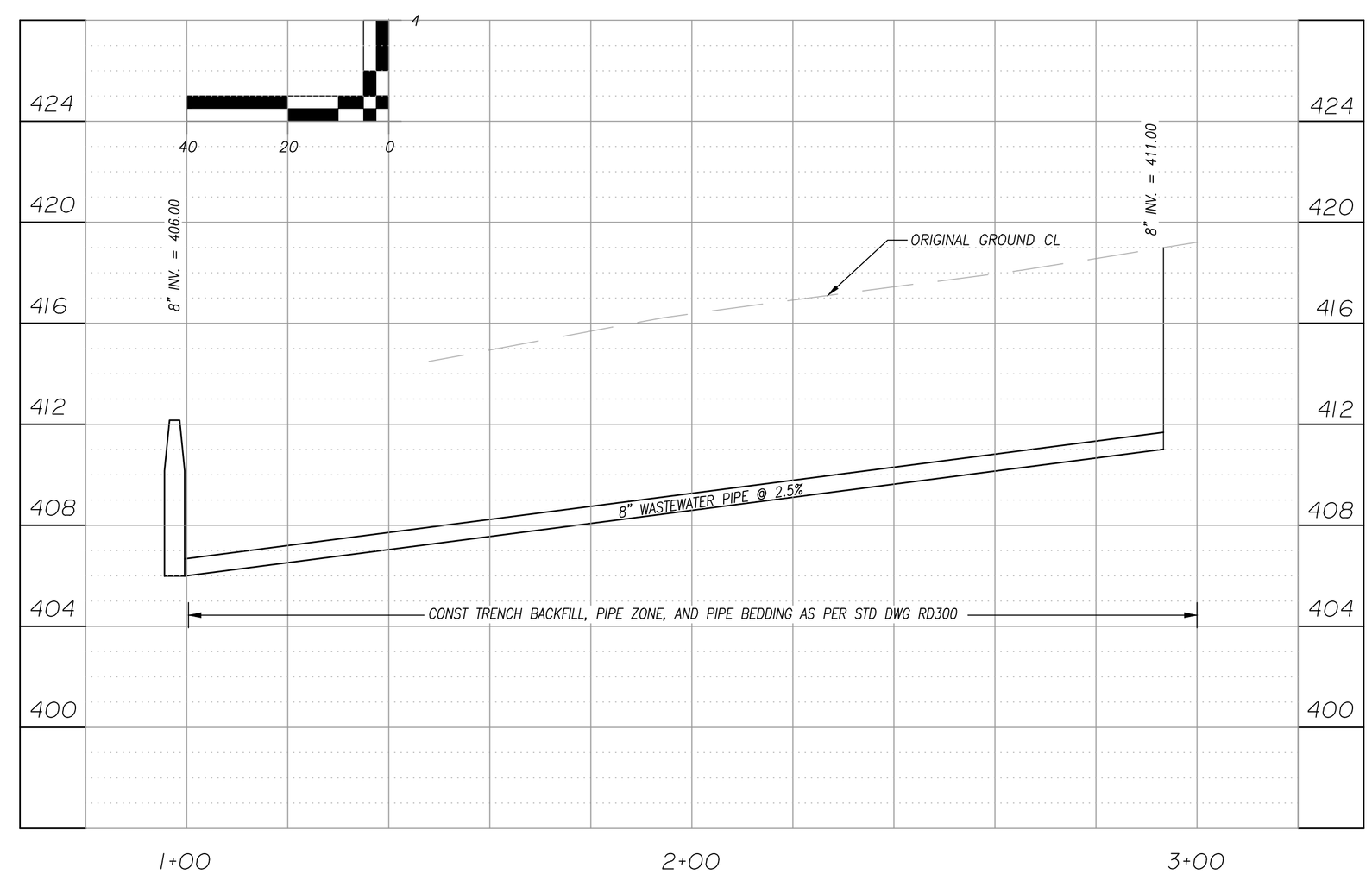

Branch ENGINEERING Inc.
Since 1977
civil • transportation
structural • geotechnical
SURVEYING
310 5th Street
Springfield, OR 97477
p: 541.746.0637
www.BranchEngineering.com
Springfield OR | Salem OR

PRELIMINARY
NOT FOR CONSTRUCTION

project title:

8th STREET SANITARY SEWER IMPROVEMENTS

CITY OF VENETA
881 84 8TH STREET
VENETA, OREGON

revisions:

date:	MAY 12, 2016
drawn by:	MD
designer:	NP
project no:	14-006f

McCUTCHEON SEWER PLAN PROFILE & DETAILS

sheet: C3

Z:\2014\14-006f 8th Street Sewer\drawings\14-006f 8th St SEWER.dwg 5/13/2016 3:39 PM MARISSA

copyright © 2016 Branch Engineering Inc.

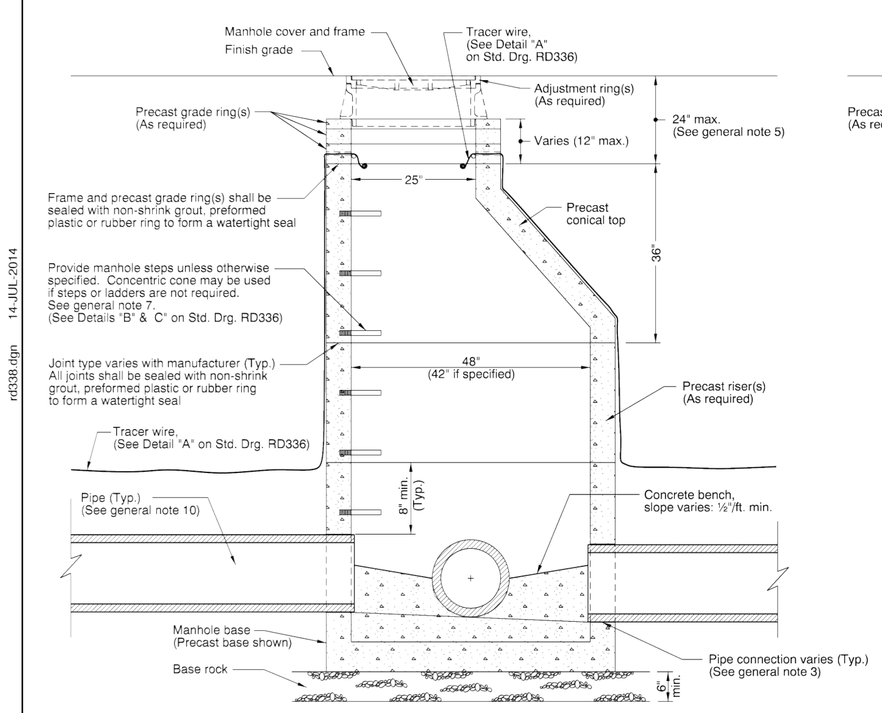

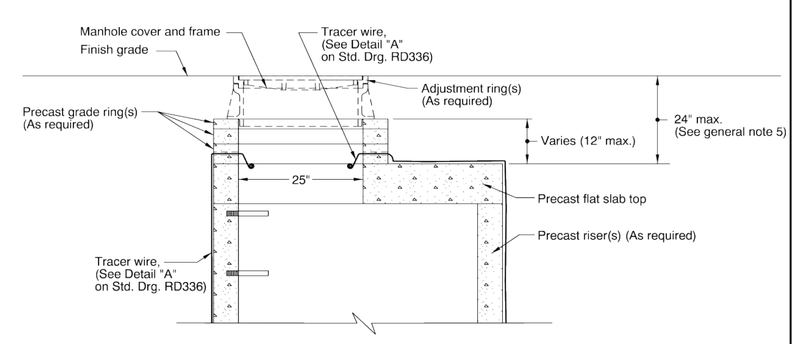

GENERAL NOTES FOR ALL DETAILS:

1. All precast products shall conform to requirements of ASTM C478.
2. Standard precast manhole section diameter shall be 48". Use 42" if specified by the Engineer.
3. See Std. Drg. RD345 for pipe to manhole connections.
4. See Std. Drg. RD344 for manhole base section.
5. Adjust 24" maximum.
6. All connecting pipes shall have a tracer wire, or approved alternate.
7. See Std. Drg. RD337 for manhole safety ladder.
8. See Std. Drg. RD336 for details not shown.
9. See Std. Drg. RD356 for manhole covers and frames, manhole adjustment rings, etc.
10. Max. pipe diameter varies with pipe material.
11. See Std. Drg. RD342 for shallow manholes.
12. Location, elevation, diameter, slope, and number of pipe(s) varies, see project plans.
13. This detail limited to interior drop of 24".
    See Std. Drgs. RD350 or RD352 for drop manhole details for drops in excess of 24".

The selection and use of this Standard Drawing, while designed in accordance with generally accepted engineering principles and practices, is the sole responsibility of the user and should not be used without consulting a Registered Professional Engineer.

CALC. BOOK NO. N/A

BASELINE REPORT DATE 14-JUL-2014

NOTE: All material and workmanship shall be in accordance with the current Oregon Standard Specifications

OREGON STANDARD DRAWINGS

STANDARD SANITARY SEWER MANHOLE

2015

DATE	REVISION DESCRIPTION

RD338 14-JUL-2014 rd338.dgn

Effective Date: June 1, 2016 - November 30, 2016 RD338

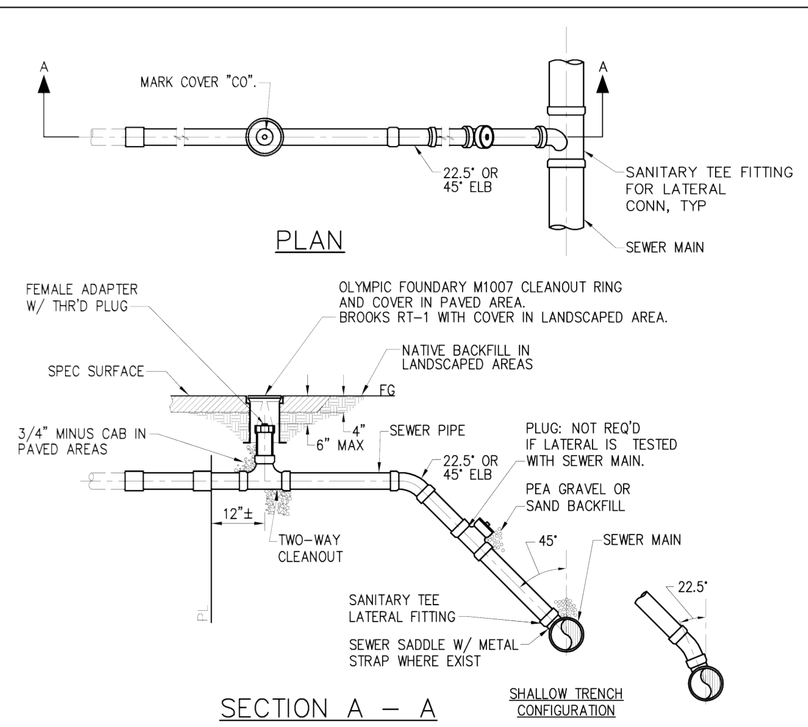

NOTES:

1. ALL CLEANOUT MATERIAL SAME AS CARRIER PIPE.
2. PIPE & FITTING SHALL BE COMPATIBLE. ONLY MANUFACTURER'S FITTING SHALL BE USED.
3. CLEANOUT REQUIRED FOR ALL NEW CONECTIONS & LATERAL REPLACEMENTS.
4. WHERE DEEP CONNECTION IS AT AN ANGLE LESS THAN 45° FROM VERTICAL DUCTILE IRON PIPE & FITTINGS SHOULD BE USED.
5. PRESSURE TEST TO PROPERTY LINE REQUIRED.
6. CLEANOUTS ARE NOT ALLOWED IN SIDEWALK. LOCATE CLEANOUTS 1' MIN. BEHIND SIDEWALK.

WEBER ELLIOTT ENGINEERS, P.C.
Eugene, OR

City of Veneta

CITY OF VENETA STANDARD DRAWING

SINGLE SEWER LATERAL

NTS | NOVEMBER 2007 | V309

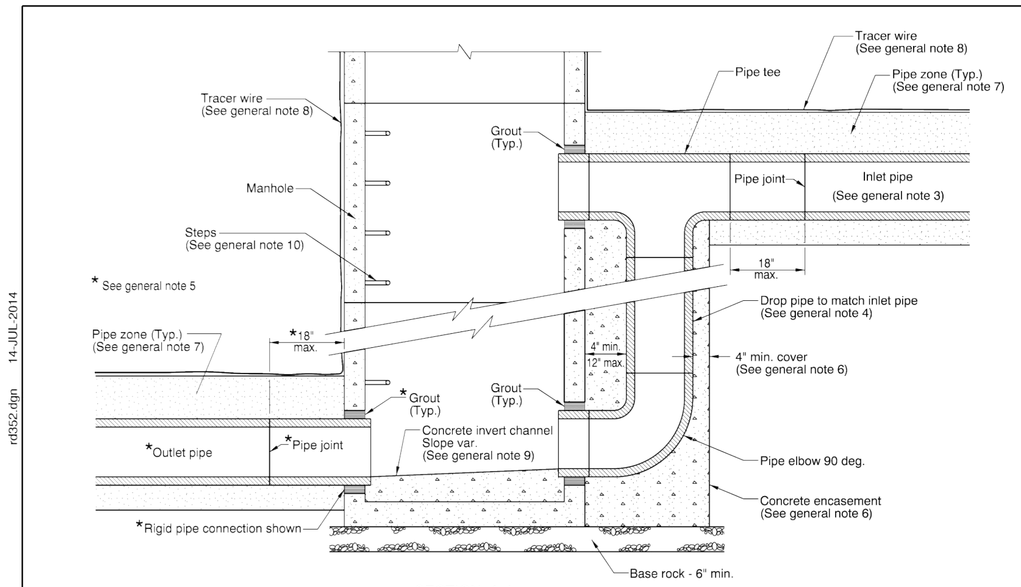

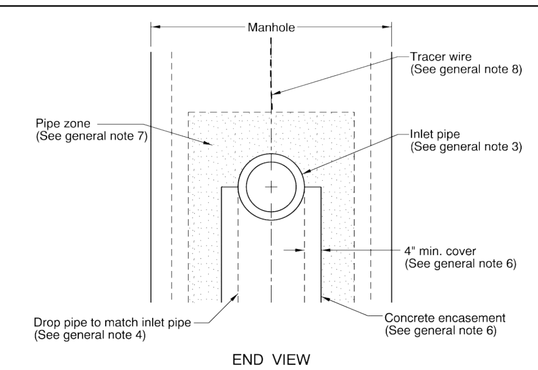

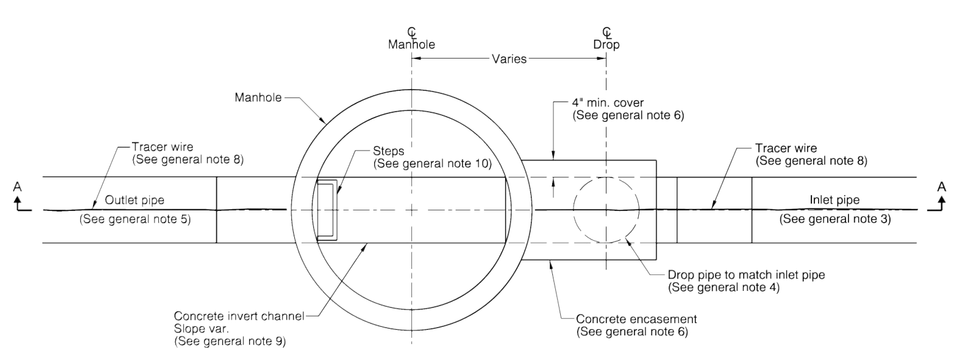

GENERAL NOTES FOR ALL DETAILS:

1. See appropriate manhole standard drawings for details not shown.
2. Location, elevation, diameter, slope, and number of pipe(s) varies, see project plans. Only 1 outside drop pipe allowed per manhole. See project plans for pipe material.
3. Inlet pipe may be rigid or flexible, maximum diameter 18". The connecting pipe shall have a flexible, gasketted and unrestrained joint within 18" of pipe tee, as shown. Joint type varies with manufacturer.
4. Drop pipe, tee, and elbow to match inlet pipe.
5. Rigid pipe connection shown. Outlet pipe(s) may be rigid or flexible, see project plans. Max. outlet pipe diameter varies with pipe material. See Std. Drg. RD345 for pipe to manhole connections.
6. Concrete encasement shall be commercial grade concrete. Provide 4" minimum cover over outer most parts of pipe and fittings.
7. Pipe zone varies, see Std. Drg. RD300.
8. All connecting pipes shall have a tracer wire, or approved alternate. See Std. Drg. RD336 for tracer wire details.
9. Invert channels shall be constructed to provide smooth slopes and radii to outlet pipe.
10. See Std. Drg. RD336 for manhole steps details.

CALC. BOOK NO. N/A

BASELINE REPORT DATE 14-JUL-2014

NOTE: All material and workmanship shall be in accordance with the current Oregon Standard Specifications

The selection and use of this Standard Drawing, while designed in accordance with generally accepted engineering principles and practices, is the sole responsibility of the user and should not be used without consulting a Registered Professional Engineer.

OREGON STANDARD DRAWINGS

OUTSIDE DROP MANHOLES

2015

DATE	REVISION DESCRIPTION

RD352 14-JUL-2014 rd352.dgn

Effective Date: June 1, 2016 - November 30, 2016 RD352

Z:\2014\14-006f 8th Street Sewer\drawings\14-006f 8th St SEWER.dwg 5/12/2016 11:02 AM MARISSA

copyright © 2016 Branch Engineering, Inc.

Branch ENGINEERING Inc
Since 1977
civil • transportation
structural • geotechnical
SURVEYING
310 5th Street
Springfield, OR 97477
p: 541.746.0637
www.BranchEngineering.com
Springfield OR | Salem OR

PRELIMINARY
NOT FOR CONSTRUCTION

project title:

8th STREET SANITARY SEWER IMPROVEMENTS

CITY OF VENETA
88184 8TH STREET
VENETA, LANE COUNTY, OREGON

revisions:

date:	MAY 5, 2016
drawn by:	MD
designer:	NP
project no:	14-006f

DETAILS

sheet: C4

CITY OF VENETA

RESOLUTION NO. 1204

A RESOLUTION DESIGNATING PROPOSED WASTEWATER COLLECTION SYSTEM IMPROVEMENTS ON 8th STREET AND DECLARING THE CITY'S INTENTION TO FORM A LOCAL IMPROVEMENT DISTRICT TO FUND SUCH IMPROVEMENTS

WHEREAS, the City of Veneta directed Branch Engineering, as City Engineer, to prepare a report for the installation of wastewater collection system improvements within the 8th Street and McCutcheon rights-of-way adjacent to the properties as indicated on Exhibit A, attached hereto and incorporated herein by reference; and

WHEREAS, on June 25, 2016, by motion of the City Council, the City approved such engineer's report; and

WHEREAS, the City Council desires to designate the proposed improvement, declare its intention to make such improvement, provide the manner and method of carrying out the improvement, and direct the Recorder to give notice of such improvement;

NOW, THEREFORE, be it resolved by the Veneta City Council that

Section 1 Project Boundary. Each property within the boundary shown on Exhibit A is hereby designated as specially benefitting from the proposed wastewater collection system improvement project (Improvement) and, therefore, is designated for inclusion within an associated local improvement district (LID).

Section 2 Council Intention. As authorized by Veneta Municipal Code Chapter 3.10.050 and the City's Public Contracting Rules, these wastewater collection system improvements shall be constructed by independent contract pursuant to a bid or bids awarded by the City.

Section 3 Assessment. The costs of such Improvements shall be assessed against the benefited properties, provided, however, that the City Council reserves the right to exclude all or any portion of the benefited properties from the project, or to not allocate the full improvement assessment to one or more benefitted property.

Section 4 Notice Requirements. The City Recorder is hereby directed to give notice of the Improvements by not less than two publications, one week apart, in a newspaper of general circulation within the City of Veneta, and by mailing copies of such notice by registered or certified mail to the property owners to be assessed for the costs of such improvements. The notice shall contain all matters required by Veneta Municipal Code Chapter 3.10.040.

<u>Section 5</u> Public Hearing Notice. The public hearing on the proposed Improvements shall be scheduled for Monday, September 12, 2016 at 7:00 p.m. at Veneta City Hall, 88184 8th Street, Veneta, Oregon.

PASSED AND ADOPTED BY THE VENETA CITY COUNCIL this ____ day of July, 2016.

_XXXXXXXXXXXXXXXX_____
Sandra H. Larson, Mayor

ATTEST:

_XXXXXXXXXXXXXXX_____
Darci Henneman, City Recorder

ORDINANCE NO. 535

AN ORDINANCE REPEALING ORDINANCE NO. 515

WHEREAS, on October 13, 2014, the Veneta City Council adopted Ordinance No. 515, an ordinance adopting Chapter 3.40 of the Veneta Municipal Code and imposing a tax on sales of medical and recreational marijuana in the City of Veneta; and

WHEREAS, following the City's adoption of Ordinance No. 515, the Oregon Legislature adopted ORS 475B.345, which allows cities in Oregon to impose a 3% tax on retail recreational marijuana sales, if that 3% tax is approved by the voters of the City at the general election in November of 2016; and

WHEREAS, ORS 475B.345 prohibits cities from imposing all other taxes and fees on the production, processing, or sale of marijuana; and

WHEREAS, Ordinance No. 515 is now preempted by state law and is unenforceable;

NOW, THEREFORE, THE CITY OF VENETA ORDAINS AS FOLLOWS:

Section 1 Chapter 3.40 of the Veneta Municipal Code is hereby repealed.

Section 2 Effective Date. This ordinance shall take effect on the 30th day after adoption by the Council and signature by the Mayor.

READ FOR A FIRST TIME, BY TITLE ONLY, this 27 day of June, 2016, no Council member present having requested that it be read in full.

READ FOR A SECOND TIME, BY TITLE ONLY, this ____ day of July, 2016, no Council member present having requested that it be read in full.

PASSED AND ADOPTED by a _____ vote for and _____ vote against by the Veneta City Council this ____ day of July, 2016.

XXXXXXXXXXXXXXXXX
Sandra H. Larson, Mayor
Executed this ____ day of _____

ATTEST:

XXXXXXXXXXXXXXXXXX
Darci Henneman, City Recorder
Executed this ____ day of _____

Resolution No. 535

VENETA CITY COUNCIL
AGENDA ITEM SUMMARY

Title/Topic: **AMENDMENTS TO TITLE 3 OF THE VMC RELATED TO DISPOSITION OF PERSONAL PROPERTY**

Meeting Date: July 25, 2016
Department: Finance

Staff Contact: Shauna Hartz
Email: shartz@ci.veneta.or.us
Telephone Number: 541-935-2191 Ext. 305

ISSUE STATEMENT
Staff is recommending amendments to Veneta's current Municipal Code (VMC) to clarify the types of personal property governed by VMC 3.05.

BACKGROUND
On occasion, due to abandonment, the City takes custody of personal property owned by parties other than the City. The process for disposing this personal property was primarily adopted in 1981 and is outlined in VMC 3.05.

Recently the City engaged in the disposal of property purchased by the City; however, the process was complicated by language in VMC 3.05, specifically 3.05.070. The main purpose of this proposed amendment is to revise that section to clearly state that 3.05 does not apply to property purchased by or donated to the City.

The other changes being proposed to the other sections of VMC 3.05 are housekeeping in nature.

Attachment A to this summary is the redlined version of the existing code language in Title 3 Chapter 3.05. Also attached, labeled as Attachment B, is a draft version of a form that will be put into practice for the processing of personal property taken into custody by the City.

RELATED CITY POLICIES
VMC 3.05

COUNCIL OPTIONS
1. Approve Ordinance as presented.
2. Approve Ordinance with suggested changes.
3. Postpone approval of Ordinance and offer guidance to staff.

CITY ADMINISTRATOR'S RECOMMENDATION
Approve Ordinance as presented.

SUGGESTED MOTION
"I make a motion to approve Ordinance 537, "An Ordinance Amending Veneta Municipal Code Title 3 Chapter 05, for first reading, by title only."

ATTACHMENTS
A. Redlined version of VMC 3.05
B. Draft Record of Custody form

Title 3

REVENUE AND FINANCE

Chapters:

3.05 Disposition of Personal Property
3.10 Public Improvements and Special Assessments
3.15 *Repealed*
3.20 Water and Sewer Use Fees and Deposits
3.25 Regulation of Sewer Connection and Use Fees
3.30 Land Use and Improvement Fees
3.35 Motor Vehicle Fuel Dealers Tax

Chapter 3.05

DISPOSITION OF PERSONAL PROPERTY

Sections:

3.05.010 Custody of property.
3.05.020 Surrender to true owner.
3.05.030 Sale procedure.
3.05.040 ~~Certificate~~ Bill of sale.
3.05.050 Alternative disposal.
3.05.060 Dangerous or perishable property.
3.05.070 Scope.

3.05.010

Custody of property.

Whenever any personal property other than motor vehicles is taken into the custody ~~of~~ by any City department by reason of seizure, abandonment, or for any other reason, the personal property shall be turned over to and held by the public works department at the expense and risk of the owner or person lawfully entitled to possession of the property. (Ord. 219 § 1, 1981)

3.05.020

Surrender to true owner.

Within 60 days after such property is taken into possession, except when confiscated or held as evidence, the owner or person lawfully entitled to possession may reclaim the same upon written request ~~application~~ to the public works director, or designee,~~epartment,~~ submission of satisfactory proof of ownership or right to possession, and payment of charges and expenses, if any, incurred in the storage, preservation and custody of the property. (Ord. 219 § 2, 1981)

3.05.030

Sale procedure.

(1) At any time after said 60-day period, the public works director, or designee, shall sell at public auction any ~~unclaimed~~ property which has been taken into custody and not reclaimed and any property which has been confiscated and not ordered destroyed, except such property held as evidence in any legal or court proceeding. Notice of such sale shall be given once by publication in a newspaper of general circulation in the city at least 10 days before the date of sale, giving the

time and place of sale and generally describing the property to be sold.

(2) All sales of such property shall be for cash to the highest and best bidder; provided, however, that any person appearing at or prior to such sale and proving ownership or right of possession thereto shall be entitled to reclaim the property upon the payment of the charges and expenses incurred by the city in the storage, preservation and custody of the property and a proportionate share of the costs of advertising the same for sale.

(3) If no bids are entered for the property or if the highest bid entered is less than the costs incurred by the city, the public works director may enter a bid on behalf of the city in an amount equal to such costs. If bid on by the city, the property shall become the property of the city as compensation for the costs incurred or, if no use or value to the city, shall be disposed of in such manner as the city administrator directs.

(4) The proceeds of a sale shall be first applied to payment of the cost of the sale and the expense incurred in the preservation, storage and custody of the property, and the balance, if any, shall be credited to the general fund of the city.

(5) Sales shall be without the right of redemption. (Ord. 219 § 3, 1981)

3.05.040

~~Certificate~~ Bill of sale.

At the time of the payment of the purchase price, the public works director, or designee, shall execute a bill ~~certificate~~ of sale and release of liability in duplicate, the original to be delivered to the purchaser and a copy to be kept on file in the office of the city recorder, which ~~certificate~~ bill of sale shall contain the date of sale, the consideration paid, a brief description of the property, and a stipulation that the city does not warrant the condition or title of such property other than the return of the purchase price in case the title is for any reason invalid. (Ord. 387 § 5, 1998; Ord. 219 § 4, 1981)

3.05.050

Alternative disposal.

In lieu of a sale of the property under the foregoing provisions of this act, the public works director, with the approval of the Veneta city council, may transfer any portion of ~~unclaimed~~ the property to the city for use by the city or may give the ~~unclaimed~~ property to a worthy charity. (Ord. 219 § 5, 1981)

3.05.060

Dangerous or perishable property.

Any property coming into the possession of the public works department~~irector~~ which the public works director, or designee,~~he~~ determines to be dangerous or perishable may be disposed of immediately, without notice, in such manner as is~~he~~ determined~~s~~ to be in the public interest. (Ord. 219 § 6, 1981)

3.05.070

Scope.

This chapter shall apply to all personal property, except motor vehicles, now or hereafter taken into the custody of the city. This chapter shall not apply to personal property purchased by the City. (Ord. 219 § 7, 1981)

Attachment B

City of Veneta
Record of Custody
For Personal Property

Date Property Taken Into Custody: _____ Obtained By: _____

Description of Property:

Site Property Taken From: _____

Reason Property Taken:

Date Public Works Department Received Property: _____

Date Request Received for Release: _____
(needs to be within 60 days of Custody Date)

Proof of Ownership Provided:

Charges Due: $ -

Date Charges Paid: _____ Payment Received By: _____

Method of Disposition: (supply applicable information depending on disposition method)

Auction	City "Purchase"	City Use
Auction Date:	Date Purchased:	Date Council Approved:
Date Advertised: (must allow for at least 10 days notice)	Amount Paid: (will be equal to incurred costs)	Date Put into Use:
Bids Received: Name Amount	Date Sold:	Donation Date:
	Sale Method:	Donated To:
	Staff Initials	Staff Initials
Bill of Sale : _____		
Staff Initials _____		

ORDINANCE NO. 537

AN ORDINANCE AMENDING VENETA MUNICIPAL CODE TITLE 3 CHAPTER 05

WHEREAS, the current language in Veneta Municipal code (VMC) Title 3, Chapter 05 was primarily established by Ordinance No. 219 in 1981; and

WHEREAS, the City on occasion takes personal property into custody; and

WHEREAS, the process for disposing of such personal property is different and separate from the process for personal property purchased by or donated to the City; and

WHEREAS, the City wishes to clarify the applicability of Title 3 Chapter 05

NOW, THEREFORE, THE CITY OF VENETA ORDAINS AS FOLLOWS:

Section 1 Amending VMC 3.05, Disposition of Personal Property: VMC 3.05 is hereby amended to read as follows:

"Chapter 3.05

DISPOSITION OF PERSONAL PROPERTY

Sections:
3.05.010 Custody of property.
3.05.020 Surrender to true owner.
3.05.030 Sale procedure.
3.05.040 Bill of sale.
3.05.050 Alternative disposal.
3.05.060 Dangerous or perishable property.
3.05.070 Scope.

3.05.010

Custody of property.

Whenever any personal property other than motor vehicles is taken into the custody by any City department by reason of seizure, abandonment, or for any other similar reason, the personal property shall be turned over to and held by the public works department at the expense and risk of the owner or person lawfully entitled to possession of the property.

3.05.020

Surrender to true owner.

Within 60 days after such property is taken into possession, except when confiscated or held as evidence, the owner or person lawfully entitled to possession may reclaim the same upon written request to the public works director, or designee, submission of satisfactory proof of ownership or right to possession, and payment of charges and expenses, if any, incurred in the storage, preservation and custody of the property.

3.05.030

Sale procedure.

(1) At any time after said 60-day period, the public works director, or designee, shall sell at public auction any property which has been taken into custody and not reclaimed and any property which has been confiscated and not ordered destroyed, except such property held as evidence in any legal or court proceeding. Notice of such sale shall be given once by publication in a newspaper of general circulation in the city at least 10 days before the date of sale, giving the time and place of sale and generally describing the property to be sold.

(2) All sales of such property shall be for cash to the highest and best bidder; provided, however, that any person appearing at or prior to such sale and proving ownership or right of possession thereto shall be entitled to reclaim the property upon the payment of the charges and expenses incurred by the city in the storage, preservation and custody of the property and a proportionate share of the costs of advertising the same for sale.

(3) If no bids are entered for the property or if the highest bid entered is less than the costs incurred by the city, the public works director may enter a bid on behalf of the city in an amount equal to such costs. If bid on by the city, the property shall become the property of the city as compensation for the costs incurred or, if no use or value to the city, shall be disposed of in such manner as the city administrator directs.

(4) The proceeds of a sale shall be first applied to payment of the cost of the sale and the expense incurred in the preservation, storage and custody of the property, and the balance, if any, shall be credited to the general fund of the city.

(5) Sales shall be without the right of redemption.

3.05.040

Bill of sale.

At the time of the payment of the purchase price, the public works director, or designee, shall execute a bill of sale and release of liability in duplicate, the original to be delivered to the purchaser and a copy to be kept on file in the office of the city recorder, which bill of sale shall contain the date of sale, the consideration paid, a brief description of the property, and a stipulation that the city does not warrant the condition or title of such property other than the return of the purchase price in case the title is for any reason invalid.

3.05.050

Alternative disposal.

In lieu of a sale of the property under the foregoing provisions of this act, the public works director, with the approval of the Veneta city council, may transfer any portion of the unclaimed property to the city for use by the city or may donate the unclaimed property to a worthy charity.

3.05.060

Dangerous or perishable property.

Any property coming into the possession of the public works department which the public works director, or designee, determines to be dangerous or perishable may be disposed of immediately, without notice, in such manner as is determined to be in the public interest.

3.05.070

Scope.

This chapter shall apply to all personal property, except motor vehicles, now or hereafter taken into the custody of the city. This chapter shall not apply to personal property purchased by or donated to the City."

Section 2 Savings. Notwithstanding these amendments, the City Code provisions in existence at the time any criminal or civil enforcement actions were commenced shall remain valid and in full force and effect for purposes of all cases filed or commenced during the times said provision(s) or portions thereof were operative.

Section 3 Severability. The sections, subsections, paragraphs and clauses of this ordinance and the attached Code provisions are severable. The invalidity of one section, subsection, paragraph, or clause shall not affect the validity of the remaining sections, subsections, paragraphs and clauses.

Section 4 Codification. Provisions of this Ordinance shall be incorporated into the City Code, and the words "ordinance" or "section" may be changed to "code," "article," "chapter," "division," or another word, and the sections of this Ordinance may be renumbered or re-lettered, provided however, that any recital clause and boilerplate provisions of this Ordinance (i.e., Section Nos. 3 through 7) will not be codified, and the City Recorder is authorized to correct any cross-references and any typographical errors.

Section 5 Effective Date. This ordinance will go into full force and effect on the 30th day after City Council enactment.

READ FOR A FIRST TIME, BY TITLE ONLY, this ____ day of July, 2016, no Council member present having requested that it be read in full.

READ FOR A SECOND TIME, BY TITLE ONLY, this ____ day of _____, 2016, no Council member present having requested that it be read in full.

PASSED AND ADOPTED by a _____ vote for and _____ vote against by the Veneta City Council this ____ day of _____, 2016.

XXXXXXXXXXXXXXXXX
Sandra H. Larson, Mayor
Executed this ____ day of

ATTEST:

XXXXXXXXXXXXXXXXX
Darci Henneman, City Recorder
Executed this ____ day of

VENETA CITY COUNCIL
AGENDA ITEM SUMMARY

Title/Topic: Added Scope of Work for 2016 Pavement Preservation Project

Meeting Date: June 25, 2016
Department: Public Works

Staff Contact: Kyle Schauer
Email: kschauer@ci.veneta.or.us
Telephone Number: 541-935-2191 Ext. 313

ISSUE STATEMENT

Will the City Council authorize staff to add additional work into the contract with Wildish Construction as part of the 2016 Pavement Preservation Projects?

BACKGROUND

At the June 27th City Council Meeting, the City Council authorized staff to award the contract for the 2016 Pavement Preservation Projects to Wildish Construction. The bid from Wildish Construction was for $204,160.00. To include a contingency, the Council authorized up to $225,000 for the project.

The final bid amount was considerably lower than the engineer's estimate of approximately $300,000. Due to the realized savings, staff entered into discussions with Wildish Construction about the possibility of adding additional work to the contract.

The city requested an estimate for a change order to the contract to add milling and asphalt overlay to the section of 9th Street from Parkside through the intersection of Sherwood Street. Also included would be a short section of Sherwood Street as well as all of Dawn Court.

These sections were previously scheduled to be done in the next two years as part of the Pavement Preservation Plan and were selected because the proposed additional work is adjacent to work already being performed under the existing contract.

Wildish Construction provided an estimate of $52,530.00 for the additional work. To provide for a 15% contingency, Staff is asking the Council to authorize an amount not to exceed $60,000 for the additional work.

If the Council authorizes the change order for the additional work, the contract with Wildish Construction would be increased to not exceed $285,000.

RELATED CITY POLICIES

The project is budgeted for construction under the Street Fund in the 2016/2017 budget year as part of the City's six-year Pavement Preservation Plan.

COUNCIL OPTIONS

1. Authorize staff to enter into a change order with Wildish Construction to add the additional work and proceed with the project.
2. Deny the request.
3. Postpone decision pending more information.

CITY ADMINISTRATOR'S RECOMMENDATION

The City Council authorize staff to enter into a change order with Wildish Construction to add the additional work to the 2016 Pavement Preservation Project thereby adjusting the total contract price to not exceed $285,000.00.

SUGGESTED MOTION

"I make a motion to authorize City staff to enter into a change order with Wildish Construction to add the additional work proposed to the 2016 Pavement Preservation Project thereby adjusting the total contract price to not exceed $285,000.00."

ATTACHMENTS

1. Change Order quote from Wildish Construction for additional work to be added to the 2016 Pavement Preservation Project.

DATE: 7/21/2016

TO: City of Veneta

RE: 2016 Veneta Pavement Preservation Change Order

FROM: Wildish Construction Co., CCB #00695

We are pleased to offer the following quote for 2016 Veneta Pavement Preservation Change Order

Item	Description	Quantity	Unit		$/Unit		Total $
1000	Mobilization	1	LS	$	3,500.00	$	3,500.00
1010	TPDT	1	LS	$	1,200.00	$	1,200.00
1020	Erosion Control	1	LS	$	600.00	$	600.00
1030	Minor Manhole Adjustments	5	EA	$	1,200.00	$	6,000.00
1040	Cold Plane 2"	3950	SY	$	2.60	$	10,270.00
1050	Level 2 HMAC Pavement	430	Ton	$	72.00	$	30,960.00
		TOTAL QUOTE =				**$**	**52,530.00**

If you have any questions in considering this quote, please call.

Thank You

Matt Young

Matt Young
matthewy@wildish.com

P.O. Box 40310 Eugene, OR 97404 / 3600 Wildish Lane Eugene, OR 97408
Telephone: 541-485-1700 Fax: 541-683-7722 www.wildish.com
An Equal Opportunity Employer

PAVING NOTES

1. 2" COLD PLANE PAVEMENT REMOVAL WITHIN DASHED BOUNDARY.
2. COORDINATE INSPECTION WITH CITY AND ENGINEER AFTER MILLING TO CONFIRM NO ADDITIONAL PAVEMENT REPLACEMENT IS NECESSARY.
3. OVERLAY COLD PLANE SURFACES WITH 2" DEPTH LEVEL 2, ½" DENSE ACP LEVELING COURSE.
4. INSTALL TACK COAT TO CLEAN COLD PLANE SURFACE PRIOR TO PAVEMENT INSTALLATION PER ODOT STANDARDS. TACK COAT SHALL BE AN INCIDENTAL ITEM TO ASPHALT INSTALLATION.

PAVING LEGEND

EDGE OF OVERLAY. SEE PAVING NOTES FOR ADDITIONAL DIRECTION.

AREA DESIGNATED FOR PAVEMENT REPLACEMENT. COORDINATE LOCATIONS WITH THE CITY OR ENGINEER IN THE FIELD PRIOR TO SAW-CUTTING.

MANHOLE TO BE PROTECTED AND ADJUSTED AS NECESSARY. INSTALL ROUND CONCRETE COLLAR PER ODOT DETAIL RD360 AS NECESSARY.

VALVE TO BE PROTECTED AND ADJUSTED AS NECESSARY. INSTALL ROUND COLLAR AS NECESSARY PER LOCAL WATER DISTRICT STANDARDS AND ODOT STANDARD DETAIL RD258.

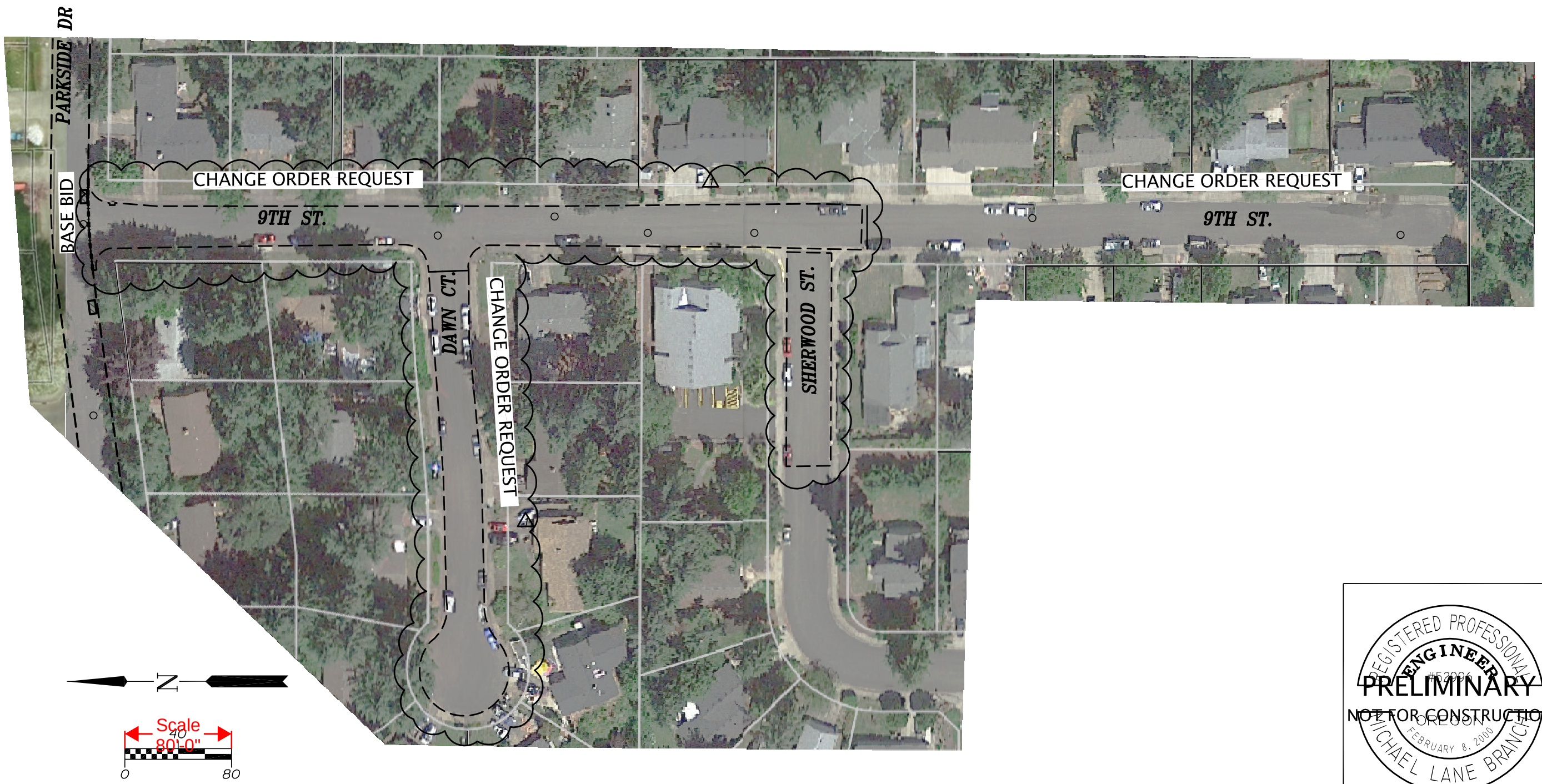

REGISTERED PROFESSIONAL ENGINEER
#52006
OREGON
FEBRUARY 8, 2000
MICHAEL LANE BRANCH

PRELIMINARY
NOT FOR CONSTRUCTION

EXPIRES: DECEMBER 31, 2017

Branch ENGINEERING INC
Since 1977
civil • transportation
structural • geotechnical
SURVEYING
310 5th Street
Springfield, OR 97477
p: 541.746.0637
www.BranchEngineering.com
Springfield OR | Salem OR

VENETA 2016 PAVEMENT PRESERVATION IMPROVEMENT PLAN

VENETA, OREGON

revisions:
1 6/24/16 CHANGE ORDER REQUEST #1

date:	MAY 24, 2016
drawn by:	ARS
designer:	MLB
project no:	16-006A

9TH STREET AND DAWN CT. PAVING PLAN

sheet: 6

Z:\2016\16-006a Veneta Pavement Preservation Plan\drawings\Branch\16-006a Pavement Pres.dwg 6/24/2016 10:15 AM NATHAN
Copyright © 2015 Branch Engineering, Inc.