2ND & 3RD STREET IMPROVEMENTS

VENETA, OREGON

GENERAL CONSTRUCTION NOTES

A. ALL MATERIALS AND WORKMANSHIP OF ITEMS TO BE MAINTAINED BY THE CITY OF VENETA WITHIN PUBLIC EASEMENTS OR STREET RIGHT-OF-WAYS SHALL MEET CITY OF VENETA PUBLIC WORKS SPECIFICATIONS "2015 OREGON STANDARD SPECIFICATIONS AND DRAWINGS". ALL MATERIALS AND WORKMANSHIP OF IMPROVEMENTS THAT WILL BE PRIVATELY OWNED AND MAINTAINED WILL BE BOUND BY THE CURRENT REQUIREMENTS OF THE STATE OF OREGON AMENDMENTS TO THE UNIFORM PLUMBING CODE CURRENT EDITION, OR CITY OF VENETA BUILDING DIVISION REQUIREMENTS.

B. THE LOCATION OF WATER LINES AND UTILITIES SHOWN ON THE PLANS ARE APPROXIMATE. THE CONTRACTOR SHALL CALL THE "ONE-CALL" UTILITY LOCATION NUMBER, 1-800-332-2344, FOR FIELD LOCATION AND DEPTH BEFORE EXCAVATING.

C. OREGON LAW REQUIRES THE CONTRACTOR TO FOLLOW RULES ADOPTED BY OREGON UTILITY NOTIFICATION CENTER. THOSE RULES ARE SET FORTH IN OAR 952-001-0010 THROUGH OAR 952-001-0090. THE CONTRACTOR MAY OBTAIN COPIES OF THE RULES BY CALLING THE CENTER. (NOTE: THE TELEPHONE NUMBER FOR THE OREGON UTILITY NOTIFICATION CENTER IS (503) 232-1987).

D. CONTRACTOR SHALL FIELD VERIFY UNDERGROUND FACILITIES DURING THE CONSTRUCTION PERIOD. CONTRACTOR WILL BE HELD RESPONSIBLE FOR THE CORRECTION OF ANY UNDERGROUND UTILITY FACILITIES DAMAGED BY CONTRACTOR'S WORK.

E. THE CONTRACTOR SHALL PROVIDE ALL TRAFFIC CONTROL DEVICES NECESSARY TO PROTECT AND SAFEGUARD THE PUBLIC AND WORKERS AGAINST INJURY AND PROTECT THE WORK AGAINST DAMAGE. ALL TEMPORARY TRAFFIC CONTROL SIGNING AND DEVICES SHALL BE IN PLACE PRIOR TO BEGINNING WORK. ALL TRAFFIC CONTROL SHALL CONFORM TO THE MANUAL ON UNIFORM TRAFFIC CONTROL DEVICES FOR STREETS AND HIGHWAYS (MUTCD), CURRENT EDITION, AS SUPPLEMENTED AND AMENDED BY THE OREGON SUPPLEMENTS. FLAGGING SHALL BE PERFORMED AS SHOWN IN THE OREGON TEMPORARY TRAFFIC CONTROL- HANDBOOK, MAY, 2006 EDITION, BY THE OREGON DEPARTMENT OF TRANSPORTATION THE CONTRACTOR SHALL BE RESPONSIBLE FOR ANY REQUIRED TRAFFIC CONTROL AS FIELD CONDITIONS WARRANT. THE CONTRACTOR SHALL SUBMIT A TRAFFIC CONTROL PLAN AT THE PRE-CONSTRUCTION CONFERENCE FOR CITY REVIEW AND APPROVAL.

F. ALL ELEVATIONS SHOWN ARE ON NAVD88 VERTICAL DATUM, SURVEY PROVIDED BY BRANCH ENGINEERING, INC..

EROSION CONTROL NOTES

A. USE PROTECTIVE MEASURES TO PREVENT DEBRIS FROM ENTERING STORM SYSTEM. PROTECT DOWNSTREAM CATCH BASINS OR ANY OTHER STORM WATER INLET WITH BIO-BAGS DURING CONSTRUCTION.

B. ALL WASTE MATERIAL ASSOCIATED WITH THIS PROJECT SHALL BE PICKED UP AND DISPOSED OF ACCORDING TO APPLICABLE STATE, FEDERAL AND LOCAL REGULATIONS.

C. SCHEDULE STREET CLEANING AT END OF PROJECT OR AS DIRECTED BY THE CITY OF VENETA.

RESTORATION NOTES

A. RESTORE OR REPLACE ANY DISTURBED LANDSCAPING OF ADJACENT PROPERTIES TO NEW OR BETTER CONDITIONS.

B. DAMAGE TO PROPERTY BOTH PUBLIC AND PRIVATE DUE TO CONSTRUCTION ACTIVITIES SHALL BE REPAIRED OR REPLACED AT CONTRACTORS EXPENSE.

UTILITY NOTES

ATTENTION: OREGON LAW REQUIRES YOU TO FOLLOW RULES ADOPTED BY THE OREGON UTILITY NOTIFICATION CENTER. THOSE RULES ARE SET FORTH IN OAR 952-001-0001 THROUGH 952-001-0090. YOU MAY OBTAIN COPIES OF THE RULES BY CALLING THE CENTER AT (503) 232-1987 OR VISITING THEIR WEBS SITE AT WWW.DIGSAFELYOREGON.COM

CALL THE TOLL FREE "ONE-CALL" NUMBER AT 800-332-2344 OR 811 FOR LOCATES AT LEAST TWO DAYS IN ADVANCE OF EXCAVATION.

RELOCATE OVERHEAD CABLE TO UNDERGROUND INSTALLATION (BY OTHERS).

PROJECT TEAM

CITY: KYLE SCHAUER,
PUBLIC WORKS DIRECTOR
CITY OF VENETA
88184 8TH STREET
PO BOX 458
VENETA, OR 97487
PH: (541) 935-2191
EMAIL: kschauer@ci.veneta.or.us

ENGINEER: LANE BRANCH, P.E.
BRANCH ENGINEERING, INC.
310 5TH STREET
SPRINGFIELD, OREGON 97477-4643
PH: (541) 746-0637
EMAIL: laneb@branchengineering.com

SURVEYOR: DAN NELSON, P.L.S.
BRANCH ENGINEERING, INC.
310 5TH STREET
SPRINGFIELD, OREGON 97477-4643
PH: (541) 746-0637
EMAIL: dann@branchengineering.com

SHEET INDEX

C0 COVER SHEET & NOTES
C1.1 2ND STREET EXISTING CONDITIONS AND DEMO PLAN
C1.2 3RD STREET EXISTING CONDITIONS AND DEMO PLAN
C2.1 2ND STREET CONSTRUCTION PLAN AND PROFILE
C3.1 3RD STREET WATER LINE PLAN AND PROFILE - BORADWAY TO McCUTCHEON
C3.2 3RD STREET WATER LINE PLAN, PROFILE, AND NOTES - McCUTCHEON TO HUNTER
C3.3 3RD STREET PAVING & UTILITY PLAN
C3.4 3RD STREET GRADING AND PROFILE
C5 DETAILS
C6 DETAILS
C7 DETAILS
C8 DETAILS
C9 DETAILS
C10 DETAILS
E1 2ND & 3RD STREET LIGHTING, SIGNING & STRIPING PLAN

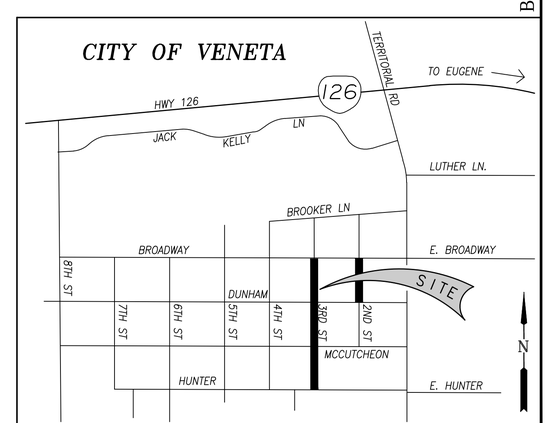

VICINITY MAP NOT TO SCALE

BID SET

Branch ENGINEERING Inc
Since 1977
civil • transportation
structural • geotechnical
SURVEYING
1462 COMMERCIAL ST. NE
SALEM, OR 97301
p: 503.749.0637
www.BranchEngineering.com
Springfield OR | Salem OR

REGISTERED PROFESSIONAL ENGINEER #52996 OREGON FEBRUARY 4, 1986 MICHAEL LANE BRANCH

Digitally signed by Michael Branch
Date: 2016.06.24 08:07:22 -09'00'

EXPIRES: DECEMBER 31, 2017

project title:

2ND & 3RD STREET IMPROVEMENTS

CITY OF VENETA
88184 8TH STREET
VENETA, OREGON

revisions:

date:	JUNE 24, 2016
drawn by:	MJD/ARS
designer:	NBP
project no:	15-006a

COVER

sheet: C0

Z:\2015\15-006a 2nd & 3rd Street Veneta\Drawings\15-006a 3rd Street.dwg 6/23/2016 2:46 PM MARISSA

copyright © 2015 Branch Engineering, Inc.

LEGEND – EXISTING

- PROPERTY/RIGHT OF WAY LINE
- CENTER LINE
- CURB
- EDGE OF AC
- OHL — OVERHEAD LINE
- SIGN
- BOLLARD
- POWER POLE
- GUY WIRE
- J — JUNCTION BOX
- EV — ELECTRIC VAULT
- WM — WATER METER
- WATER VALVE
- STORMWATER MANHOLE
- OVERHEAD LINE
- AREA DRAIN
- CONCRETE
- BUILDING
- 535.00 — SPOT ELEVATION
- TL — TAX LOT

LEGEND – DEMOLITION

- SAWCUT
- ASPHALT REMOVAL
- CONCRETE REMOVAL

CONSTRUCTION NOTES

1. REMOVE AND RELOCATE STOP SIGN.
2. REMOVE CATCH BASIN. REPLACE WITH MANHOLE OR MANHOLE TOP PER UTILITY PLAN.
3. SAWCUT AND REMOVE AC PAVING.
4. SAWCUT AND REMOVE CONCRETE WALK AND STAIRS.
5. REMOVE WOOD PLANTER BOX.
6. NOT USED.
7. MANHOLE RIM TO BE ADJUSTED. SEE UTILITY PLAN FOR MORE INFORMATION.
8. PROTECT EXISTING CATCH BASIN.

NOTES

1. THIS DOES NOT CONSTITUTE A BOUNDARY SURVEY AND IS SUBJECT TO ANY INACCURACIES A SUBSEQUENT SURVEY MAY DISCLOSE.
2. LOCATIONS OF UNDERGROUND UTILITIES SHOWN ARE BASED ON A COMBINATION OF VISIBLE FACILITIES LOCATED ABOVE GROUND AND UTILITY LOCATE MARKS. NO CERTIFICATION IS MADE TO ACTUAL LOCATION OF UNDERGROUND UTILITIES.
3. TAX LOTS SHOWN ARE APPROXIMATE.

GRAPHIC SCALE

10 0 5 10 20

(IN FEET)

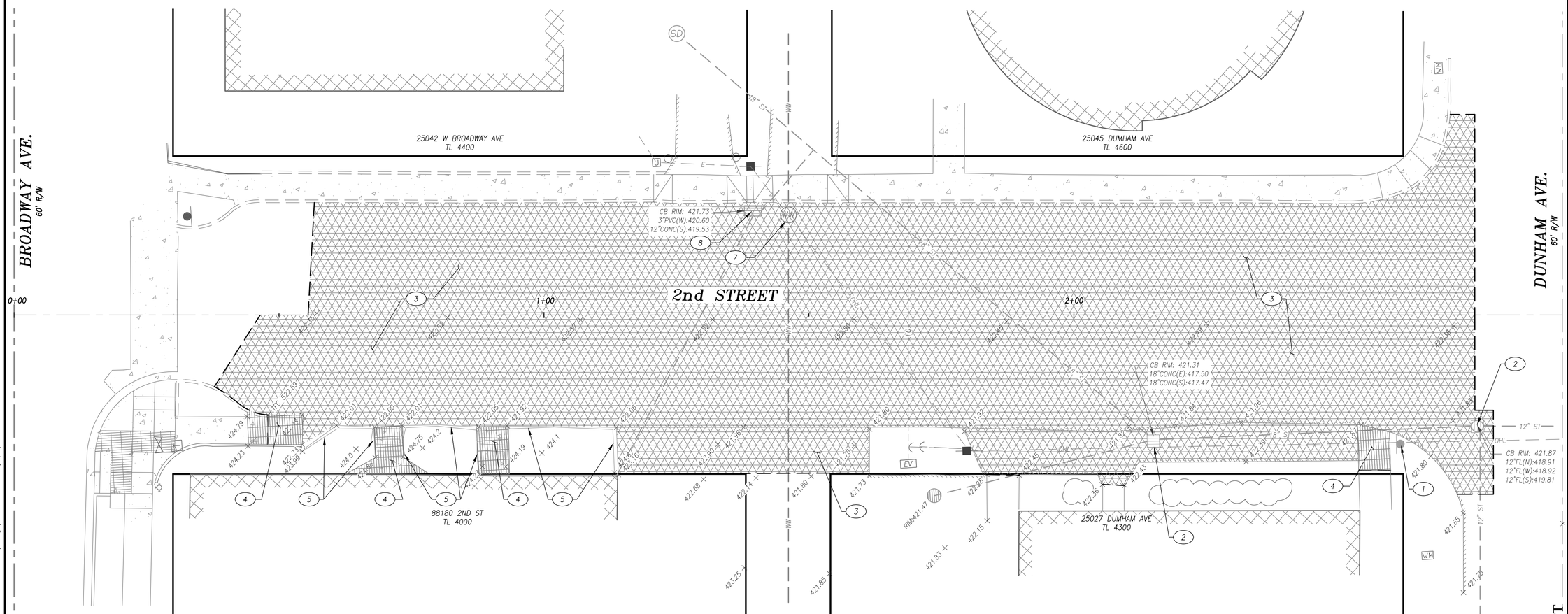

BID SET

Branch ENGINEERING Inc.
Since 1977

civil • transportation
structural • geotechnical
SURVEYING

310 5th Street
Springfield, OR 97477
p: 541.746.0637

www.BranchEngineering.com
Springfield OR | Salem OR

REGISTERED PROFESSIONAL ENGINEER #52996 M. Lane Branch OREGON FEBRUARY 4, 1997 MICHAEL LANE BRANCH

Digitally signed by M. Lane Branch
Date: 2016.06.24 08:08:05 -07'00'

EXPIRES: DECEMBER 31, 2017

project title:

2ND & 3RD STREET IMPROVEMENTS

CITY OF VENETA
88184 8TH STREET
VENETA, OREGON

revisions:

date:	JUNE 24, 2016
drawn by:	ARS
designer:	NBP
project no:	15-006a

2ND STREET
EXISTING
CONDITIONS
& DEMO PLAN

sheet:

C1.1

Z:\2015\15-006a 2nd & 3rd Street Veneta\Drawings\15-006a 2nd Street.dwg 6/23/2016 2:16 PM MARISSA

copyright © 2015 Branch Engineering, Inc.

LEGEND – EXISTING

- PROPERTY/RIGHT OF WAY LINE
- CENTERLINE
- EDGE OF ASPHALT CONCRETE
- ST — STORM SEWER
- WW — WASTEWATER SEWER
- OHL — ELECTRICAL LINE
- T — TELEPHONE/CABLE LINE
- FO — COMMUNICATION LINE
- FENCE
- BOTTOM OF SWALE
- SIGN
- POWER POLE
- GUY WIRE
- WM — WATER METER
- WATER VALVE
- CATCH BASIN
- SD — STORM WATER MANHOLE
- WW — WASTEWATER MANHOLE
- EM — ELECTRIC METER
- CONCRETE
- GRAVEL/DIRT
- DECIDUOUS TREE
- 535.00 — SPOT ELEVATION
- BUILDING

DEMOLITION LEGEND

- SAWCUT
- ASPHALT REMOVAL
- CONCRETE REMOVAL

CONSTRUCTION NOTES

1. REMOVE AND RELOCATE STOP SIGN.
2. REMOVE CATCH BASIN.
3. SAWCUT AND REMOVE AC PAVING.
4. REMOVE AND RELOCATE EXISTING FENCE
5. COORDINATE RELOCATION OF UTILITY POLES.
6. SAWCUT AND REMOVE CONCRETE PAVING.
7. SAWCUT AND REMOVE CONCRETE CURB AND GUTTER.
8. REMOVE CATCH BASIN. REPLACE WITH MANHOLE PER UTILITY PLAN.
9. ADJUST MANHOLE RIM GRADE PER UTILITY PLAN (BASE BID. SEE ALTERNATE 2 & UTILITY PLAN FOR ADDITIONAL DIRECTION).
10. REMOVE EXISTING STORM PIPE/CULVERT. REPLACE AS NOTED ON THE UTILITY PLAN. MAKE NOTE OF ANY OFF-SITE PRIVATE LATERALS AND RECONNECT TO NEW PIPE. INCLUDE LATERALS ON AS-BUILTS.

NOTES

1. THIS DOES NOT CONSTITUTE A BOUNDARY SURVEY AND IS SUBJECT TO ANY INACCURACIES A SUBSEQUENT SURVEY MAY DISCLOSE.
2. LOCATIONS OF UNDERGROUND UTILITIES SHOWN ARE BASED ON A COMBINATION OF VISIBLE FACILITIES LOCATED ABOVE GROUND AND UTILITY LOCATE MARKS. NO CERTIFICATION IS MADE TO ACTUAL LOCATION OF UNDERGROUND UTILITIES. CONTRACTOR SHALL VERIFY ALL UNDERGROUND UTILITIES
3. TAX LOTS SHOWN ARE APPROXIMATE.

GRAPHIC SCALE
10 0 5 10 20
(IN FEET)

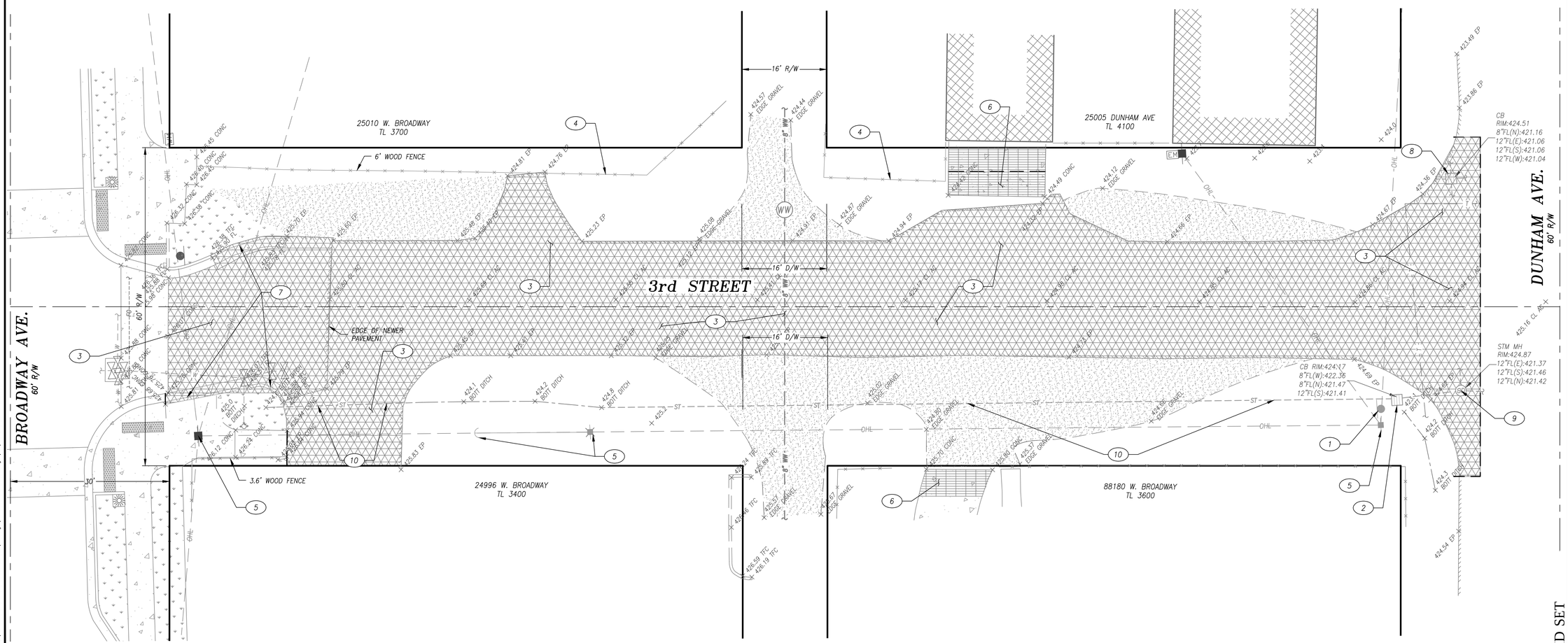

Branch ENGINEERING Inc.
Since 1977
civil • transportation
structural • geotechnical
SURVEYING
1462 COMMERCIAL ST. NE
Salem, OR 97301
p: 503.740.0637
www.BranchEngineering.com
Springfield OR | Salem OR

REGISTERED PROFESSIONAL ENGINEER #52996 OREGON FEBRUARY 4, 1997 MICHAEL LANE BRANCH

Digitally signed by M. Lane Branch
Date: 2016.06.24 08:08:11 -07'00'
M. Lane Branch

EXPIRES: DECEMBER 31, 2017

project title:

2ND & 3RD STREET IMPROVEMENTS

CITY OF VENETA
88184 8TH STREET
VENETA, OREGON

revisions:

date:	JUNE 24, 2016
drawn by:	MJD
designer:	NBP
project no:	15-006a

3RD STREET
EXISTING
CONDITIONS
& DEMO PLAN

sheet:

C1.2

BID SET

Z:\2015\15-006a 2nd & 3rd Street Veneta\Drawings\15-006a 3rd Street.dwg 6/23/2016 2:23 PM MARISSA

copyright © 2015 Branch Engineering, Inc.

CONSTRUCTION NOTES

1. CONSTRUCT BLOCK LANDSCAPE WALL. MATCH EXISTING WALL MATERIAL. SEE DETAIL SHEET C8.
5. CONSTRUCT 4" AC OVER 12" AGGREGATE BASE.
6. PROVIDE SMOOTH TRANSITION FROM OLD TO NEW – NO ABRUPT ANGLE POINTS.
7. CONSTRUCT CURB AND GUTTER PER ODOT STANDARD DRAWING RD700, SHEET C9.
8. CONSTRUCT 4" THICK SIDEWALK OVER 4" AGGREGATE BASE PER ODOT STANDARD DRAWING RD720, SHEET C7.
9. CONSTRUCT DRIVEWAY APRON PER ODOT STANDARD DRAWING RD750 (OPTION N, SHEET C7), WITH ¾" LIP PER GRADING CALLOUTS.
10. CONSTRUCT ADA RAMP IN COMPLIANCE WITH ADA GUIDELINES.
11. REPLACE CURB AND GUTTER AROUND MANHOLE AS NECESSARY.
14. ADJUST MANHOLE FRAME TO MATCH FINISHED GRADE PER ODOT STANDARD DRAWING RD360, SHEET C5, WITH ROUND CUT CONCRETE FRAME.
30. CONSTRUCT STORM MANHOLE AND CONNECT TO EXISTING PIPES PER ODOT STANDARD DRAWING RD335. INSTALL CONCRETE COLLAR IN PAVEMENT AREAS PER ODOT DETAIL RD360 WITH ROUND CONCRETE FRAME.
31. INSTALL CATCH BASIN PER ODOT STANDARD DRAWINGS RD378 AND RD339.
32. CONSTRUCT 10" 3034 PVC STORM DRAIN PIPE PER ODOT STANDARD DRAWING RD300, SHEET C5. CONNECT TO NEW MANHOLE.
33. CONSTRUCT 10" 3034 PVC STORM DRAIN PIPE PER ODOT STANDARD DRAWING RD300, SHEET C5. CONNECT TO EXISTING STORM PIPE.
34. INSTALL 6" STORM PIPE FROM STRUCTURE TO BACK OF SIDEWALK AND CAP FOR FUTURE CONNECTION. COORDINATE WITH ELECTRICAL UTILITY PROVIDER AS NECESSARY.
35. CONFIRM CONNECTION LOCATION OF PRIVATE STORM STRUCTURE AND COORDINATE RECONNECTION TO PIPE OR STRUCTURE WITH ENGINEER AND CITY.
36. APPROXIMATE LOCATION OF EXISTING STORM LATERAL. PROTECT PIPE AND REPLACE AS NECESSARY. POTHOLE AND CONFIRM LOCATION PRIOR TO STORM LINE WORK.
37. 4" PERFORATED PIPE FOR WALL FOUNDATION DRAINAGE. SEE WALL DETAIL SHEET C8.
38. INSTALL WEEP HOLE THROUGH CURB PER ODOT STANDARD DETAIL RD700, SHEET C9.
50. COORDINATE RAILING REPLACEMENT ALONG EXISTING DECK W/CITY AND PROPERTY OWNER. MATCH EXISTING RAILING STYLE.

LEGEND

PROPERTY/RIGHT OF WAY LINE
CENTER LINE
CURB
EDGE OF AC
ST — STORMWATER SEWER
WW — WASTEWATER SEWER
OHL — OVERHEAD LINE
FO — FIBER OPTIC LINE
SIGN
BOLLARD
POWER POLE
GUY WIRE
J — JUNCTION BOX
EV — ELECTRIC VAULT
WM — WATER METER
WATER VALVE
SD — STORMWATER MANHOLE
WW — WASTEWATER MANHOLE
CATCH BASIN
AREA DRAIN
CONCRETE
BUILDING
PROPOSED CURB
RELOCATED SIGN
PROPOSED CATCH BASIN
SD — PROPOSED STORMWATER MANHOLE
PROPOSED CONCRETE
PROPOSED AC PAVING
PROPOSED AC OVERLAY
PROPOSED DRIVEWAY APPROACH
PROPOSED PLANTER STRIP/LANDSCAPING
AC — PROPOSED ASPHALT GRADE
TC — PROPOSED TOP OF CURB GRADE
GL — PROPOSED GUTTER LINE GRADE
TW — PROPOSED TOP OF GROUND GRADE AT WALL
C — PROPOSED CONCRETE GRADE

GRAPHIC SCALE
10 0 5 10 20
(IN FEET)

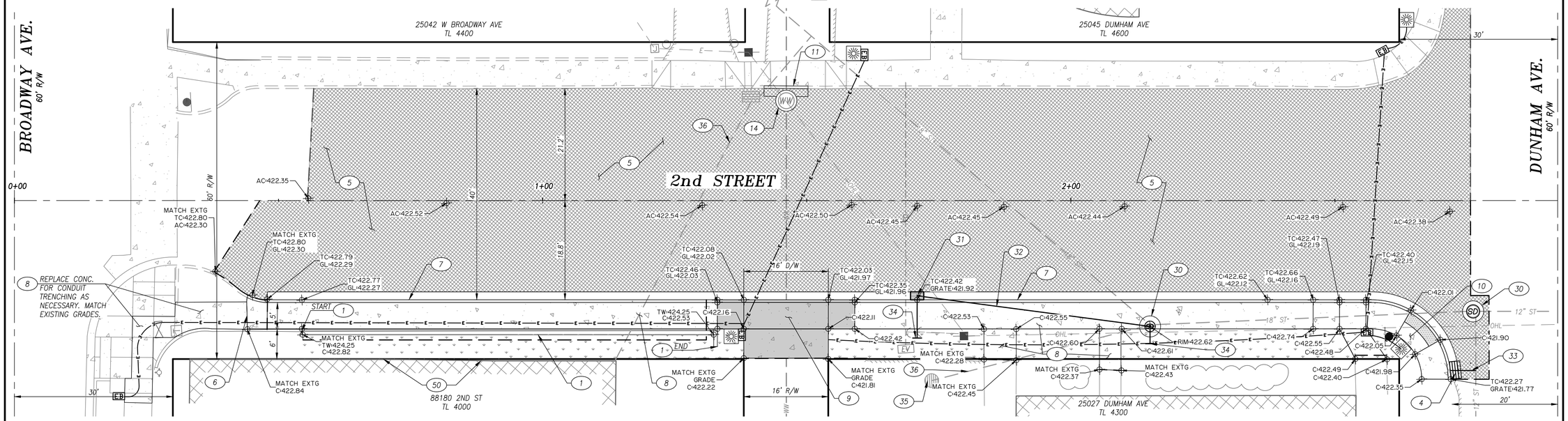

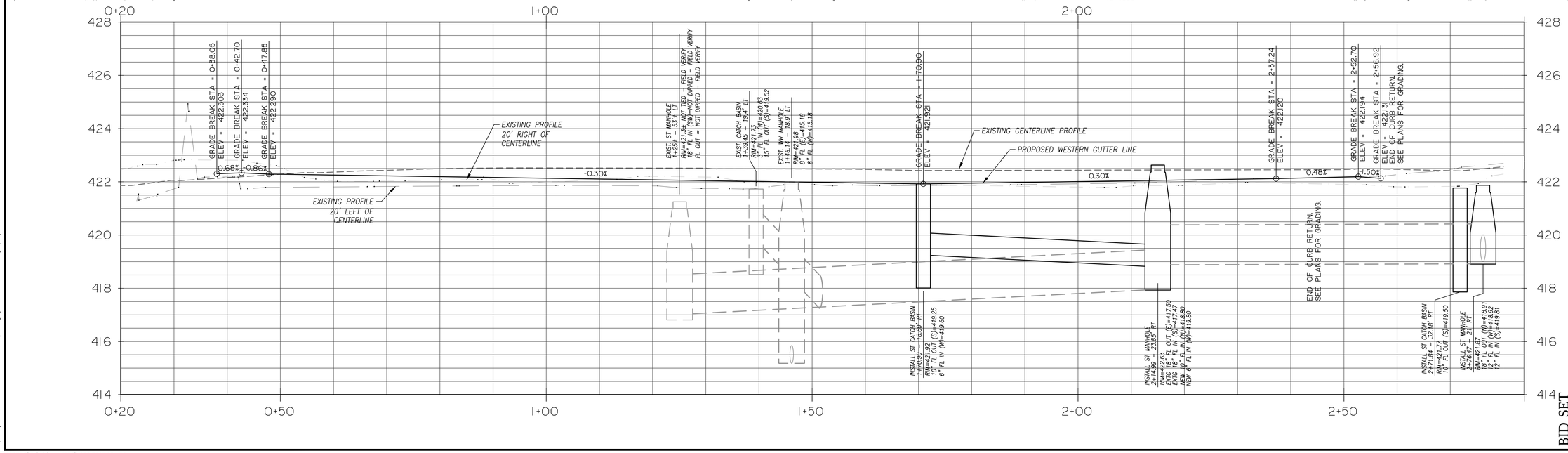

BID SET

Branch ENGINEERING Inc.
Since 1977
civil • transportation
structural • geotechnical
SURVEYING
310 5th Street
Springfield, OR 97477
p: 541.746.0637
www.BranchEngineering.com
Springfield OR | Salem OR

REGISTERED PROFESSIONAL ENGINEER #52996 M. Lane Branch OREGON FEBRUARY 4, 1997 MICHAEL LANE BRANCH

Digitally signed by M. Lane Branch
Date: 2016.06.24 08:09:15 -08'00'

EXPIRES: DECEMBER 31, 2017

project title:

2ND & 3RD STREET IMPROVEMENTS

CITY OF VENETA
88184 8TH STREET
VENETA, OREGON

revisions:

date:	JUNE 24, 2016
drawn by:	ARS
designer:	NBP
project no:	15-006a

2ND STREET CONSTRUCTION PLAN & PROFILE

sheet: C2.1

Z:\2015\15-006a 2nd & 3rd Street Veneta\Drawings\15-006a 2nd Street.dwg 6/23/2016 2:16 PM MARISSA

copyright © 2015 Branch Engineering, Inc.

LEGEND

- PROPERTY BOUNDARY LINE
- EXISTING EDGE OF ASPHALT CONCRETE
- CENTERLINE
- ST — EXISTING STORM SEWER
- WW — EXISTING WASTEWATER SEWER
- W — EXISTING WATERLINE
- OHW — EXISTING OVERHEAD LINES
- EXISTING FENCE
- EXISTING POWER POLE
- EXISTING GUY WIRE
- WM — EXISTING WATER METER
- EXISTING WATER VALVE
- EXISTING FIRE HYDRANT
- EXISTING CATCH BASIN
- SD — EXISTING STORM WATER MANHOLE
- WW — EXISTING WASTEWATER MANHOLE
- PROPOSED CATCH BASIN
- SD — PROPOSED STORM WATER MANHOLE
- PROPOSED AREA DRAIN
- PROPOSED CONCRETE SIDEWALK
- SD — SD — PROPOSED STORM SEWER
- SAWCUT LINE
- W — W — PROPOSED WATER LINE
- PROPOSED WATER VALVE

CONSTRUCTION NOTES

1. SAWCUT AND REMOVE EXISTING PAVEMENT AND REPLACE WITH LIKE MATERIAL PER ODOT STD DWG RD302 (SEE SHEET C5). PROVIDE 3" THICKNESS OF LEVEL 2 ASPHALT FOR PAVEMENT REPLACEMENT, OVER 12" CRUSHED ROCK.
2. CONSTRUCT 8" STANDARD CLASS 52 DUCTILE IRON WATER PIPE. WATERLINE TRENCH PER PER ODOT STANDARD DRAWING RD300. SEE SHEET C10. BACKFILL CLASS "B". DEFLECT PIPE AT JOINTS AS REQUIRED TO ACHIEVE ALIGNMENT. PROVIDE MECHANICAL JOINT THRUST RESTRAINT. MINIMUM 30" COVER.
3. INSTALL 11.25° MV BEND.
4. CONNECT NEW 8" WATERLINE TO EXISTING 6" ASBESTOS CEMENT WATERLINE. INSTALL NEW 8"MJxFL GATE VALVES. RESTRAIN ALL JOINTS.
6. FURNISH AND INSTALL 8"X6" TEE. PROVIDE MECHANICAL THRUST RESTRAINT.
7. FURNISH AND INSTALL FIRE HYDRANT ASSEMBLY (MUELLER 5 ¼" A423 SUPER CENTURION "250" WITH TWO HOSE NOZZLES AND ONE PUMPER NOZZLE WITH 4" INTEGRAL STORZ CONNECTION) AND 6" GATE VALVE (MULLER A-2361 RESILIENT WEDGE GATE VALVE). HYDRANT TO BE PAINTED YELLOW WITH APPROVED PAINT. SEE CITY OF VENETA STANDARD DRAWING, SHEET C10.
8. INSTALL NEW 1" SERVICE CONNECTION FROM 8" MAIN TO EXISTING WATER METER. SEE CITY OF VENETA STANDARD DRAWING, SHEET C10. 8" SERVICE SADDLE (ROMAC INDUSTRIES 202N SERVICE SADDLE) FOR PVC WATER MAIN IS REQUIRED. USE 1" MUELLER BALL CORPORATION VALVE B-25029 AND 1" ADS POTABLE WATER SERVICE PIPE (IPS) SIDR 7 FOR SERVICE LINE.
9. FURNISH AND INSTALL NEW WATER METER BOX, WATER METER LID, NEW WATER METER, 1" ANGLE METER VALVE, AND BALL METER VALVE. CONNECT EXISTING WATER SERVICE LINE TO NEW SERVICE LINE WITH APPROPRIATE FITTINGS. SEE CITY OF VENETA STANDARD DRAWING SHEET C10.
10. POTHOLE EXISTING UTILITY LINE AND AND VERIFY LOCATION, DEPTH, MATERIAL AND SIZE. NOTIFY ENGINEER OF ANY DISCREPANCIES.
11. PROPOSED WATERLINE TO GO UNDER EXISTING UTILITY LINE. PROVIDE 45° VERTICAL BENDS WITH MECHANICAL RESTRAINT TO ACHIEVE GOING UNDER PROPOSED UTILITY LINE.
12. INSTALL NEW WATER METER WITHIN RIGHT-OF-WAY. REMOVE EXISTING METER FROM PRIVATE PROPERTY AND COORDINATE WITH PROPERTY OWNER ON RECONNECTING SERVICE.
14. CONNECT TO EXISTING WATERLINE.

WATER CONSTRUCTION NOTES

1. CONTRACTOR SHALL BE RESPONSIBLE FOR PROPER HANDLING AND DISPOSAL OF ALL ASBESTOS CEMENT PIPE.
2. ALL WATER CONNECTIONS TO EXISTING WATER MAINS SHALL BE IN ACCORDANCE WITH THE RECOMMENDATIONS OF THE PIPE MANUFACTURER AND APPROPRIATE AWWA STANDARDS FOR WATER INSTALLATION.

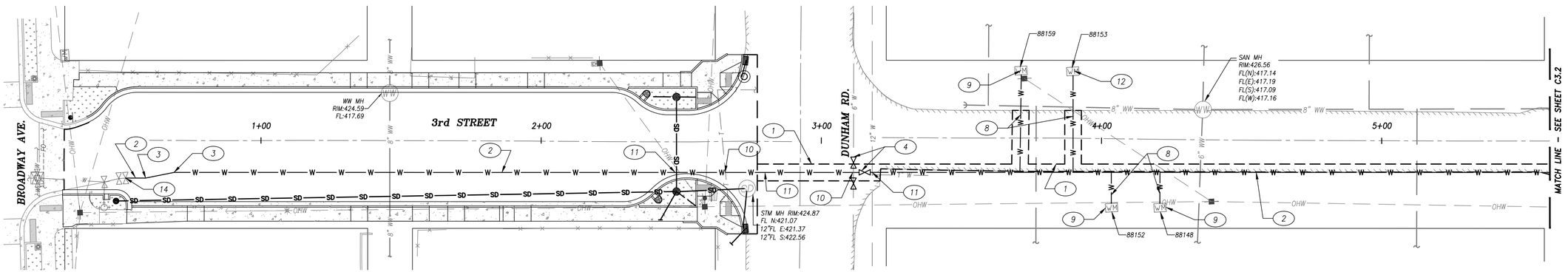

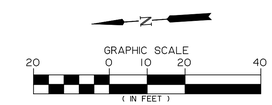

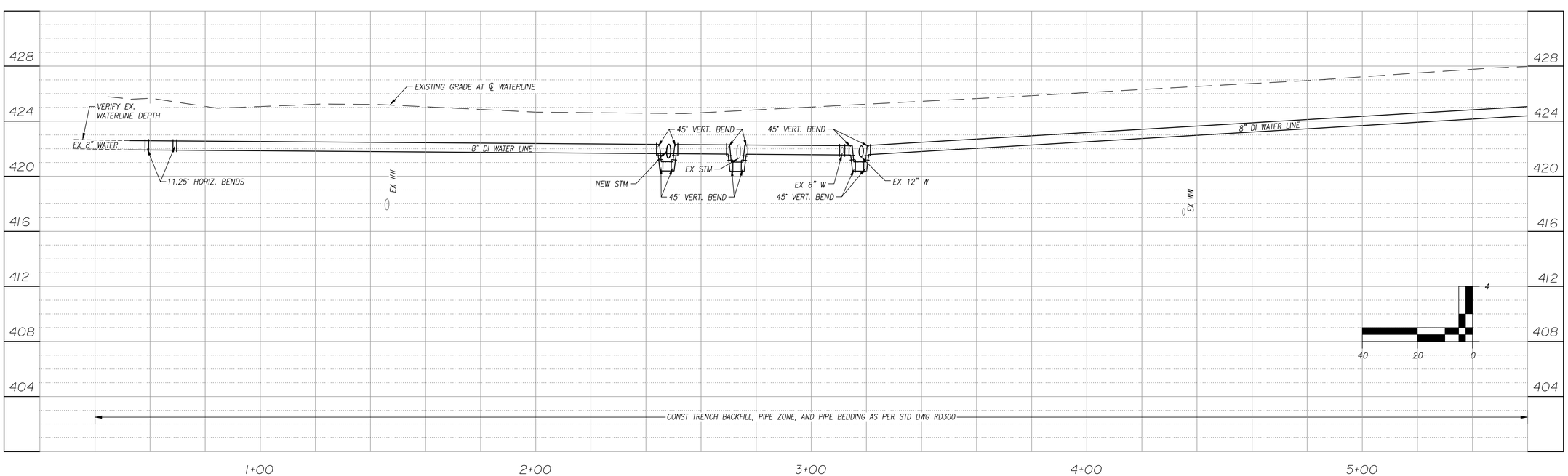

Branch ENGINEERING Inc
Since 1977
civil • transportation
structural • geotechnical
SURVEYING
310 5th Street
Springfield, OR 97477
p: 541.746.0637
www.BranchEngineering.com
Springfield OR | Salem OR

REGISTERED PROFESSIONAL ENGINEER #52996 M. Lane Branch OREGON FEBRUARY 4, 2014 MICHAEL LANE BRANCH

Digitally signed by M. Lane Branch
Date: 2016.06.24 08:10:02 -07'00'

EXPIRES: DECEMBER 31, 2017

project title:

2ND & 3RD STREET IMPROVEMENTS

CITY OF VENETA
VENETA, OREGON

revisions:

date:	JUNE 24, 2016
drawn by:	MD
designer:	MLB
project no:	16-006b

WATERLINE PLAN & PROFILE BROADWAY TO McCUTCHEON

sheet: C3.1

BID SET

Z:\2016\16-006b 3rd Street Water Line\Drawings\16-006 3rd Street Water.dwg 6/23/2016 3:25 PM MARISSA

copyright © 2016 Branch Engineering, Inc.

GENERAL NOTES

1. CONSTRUCTION SHALL CONFORM TO THE OREGON STANDARD SPECIFICATIONS FOR CONSTRUCTION AND THE OREGON STANDARD DRAWINGS. WHERE VENETA STANDARD DRAWINGS ARE REFERENCED AND APPLICABLE TO THE CONSTRUCTION, VENETA STANDARDS SHALL APPLY.
2. ALL MATERIAL AND EQUIPMENT SHOWN HEREON IS SUBJECT TO REVIEW AND APPROVAL BY THE CITY. THE CONTRACTOR SHALL APPROVE AND PROVIDE THREE COPIES OF CATALOGUE CUT SHEETS FOR ALL MATERIAL AND EQUIPMENT TO BE INSTALLED ON THE PROJECT TO THE CITY ENGINEER. ALLOW A MINIMUM OF 10 DAYS FOR CITY ENGINEER REVIEW OF SUBMITTALS.
3. WORK SHALL NOT BE PERFORMED WITHOUT CITY INSPECTIONS. A MINIMUM 48-HOUR ADVANCE NOTICE OF REQUIRED INSPECTIONS IS REQUIRED.
4. CONTRACTOR SHALL FOLLOW RULES ADOPTED BY THE OREGON UTILITY NOTIFICATION CENTER REGARDING THE REQUIREMENTS FOR UTILITY LOCATES (OAR 952-001-0090). COPIES ARE AVAILABLE AT 1-800-332-2344.
5. THE CONTRACTOR SHALL PROTECT AND REPLACE ALL DISTURBED VEGETATION, FENCING AND OTHER IMPROVEMENTS ON PRIVATE PROPERTY.
6. ACCESS TO EXISTING FIRE HYDRANTS SHALL BE MAINTAINED THROUGHOUT CONSTRUCTION.
7. CONTRACTOR IS EXPECTED TO ACTIVELY ENGAGE IN EROSION CONTROL MEASURES TO MINIMIZE THE TRANSPORT OF SEDIMENT AND SOILS FROM THE CONSTRUCTION SITE. ACTIVE ENGAGEMENT SHALL MEAN THAT ALL EROSION CONTROL METHODS ARE MAINTAINED AND THAT THE FACILITIES ARE ROUTINELY INSPECTED FOR COMPLIANCE WITH ACCEPTED EROSION CONTROL PRACTICES.
8. FOR TREES MARKED FOR PROTECTION CONTRACTOR SHALL PROVIDE ORANGE PROTECTION FENCING AT DRIP LINE OF TREE.
9. CONTRACTOR SHALL KEEP ALL WORK WITHIN ESTABLISHED R-O-W. PRIVATE PROPERTY MAY NOT BE USED FOR MATERIAL STORAGE, EQUIPMENT OR STAGING UNLESS WRITTEN APPROVAL BY THE PROPERTY OWNER IS PROVIDED TO THE CITY.
10. OREGON LAW REQUIRES YOU TO FOLLOW RULES ADOPTED BY THE OREGON UTILITY NOTIFICATION CENTER SET FORTH IN OAR 925-001-0090. CALL 1-800-322-2349 TO NOTIFY THE CENTER AT LEAST 2 BUSINESS DAYS, BUT NOT MORE THAN 10 BUSINESS DAYS, BEFORE COMMENCING AN EXCAVATION. TO COMPLY.
11. THE LOCATIONS OF ALL EXISTING UNDERGROUND FACILITIES SHOWN ON THE PLANS ARE BASED ON A FIELD SURVEY AND INFORMATION SUPPLIED BY UTILITY COMPANIES. FIELD VERIFY LOCATIONS, ELEVATIONS, TYPE AND SIZES OF ALL EXISTING UTILITIES PRIOR TO CONSTRUCTING NEW PIPING. ADJUST NEW PIPING AS REQUIRED. POTHOLING AND TRENCH EXCAVATION SHALL PRECEDE LAYING OF PIPE TO ALLOW REQUIRED ELEVATION AND ALIGNMENT ADJUSTMENTS TO BE ACCOMPLISHED WITHOUT REWORK. DEFLECT PIPE TO ADJUST ELEVATIONS AND ALIGNMENT WHEN POSSIBLE. ADJUSTMENTS SHALL BE EXPECTED AND CONSIDERED INCIDENTAL. NOTIFY ENGINEER IMMEDIATELY OF ANY CONFLICTS NOT SHOWN ON THE PLANS,
12. KEEP EXISTING UTILITIES IN SERVICE AND PROTECT THEM DURING CONSTRUCTION. WHERE INTERRUPTION OF EXISTING FACILITIES IS REQUIRED, PROVIDE A MINIMUM OF 72 HOURS NOTICE TO OWNER AND THE AFFECTED UTILITY. CONTRACTOR SHALL ARRANGE FOR THE RELOCATION OF ANY UTILITIES IN CONFLICT WITH THE PROPOSED CONSTRUCTION. MAXIMUM ALLOWABLE SHUTDOWN FOR WATER LINES AND SERVICES IS 4 HOURS UNLESS OTHERWISE APPROVED.
13. NOTIFY EACH UNDERGROUND UTILITY AT LEAST 2 DAYS PRIOR TO EXCAVATING, BORING, OR POTHOLING.
14. MAINTAIN ACCESS TO ALL HOMES AND BUSINESSES AT ALL TIMES. PROVIDE WRITTEN NOTICE TO ALL PROPERTY OWNERS AT LEAST 2 BUSINESS DAYS IN ADVANCE OF WORK IN AND/OR CROSSING DRIVEWAYS THAT WILL AFFECT ACCESS.
15. CONTRACTOR SHALL PROTECT ALL PROPERTY CORNERS, SURVEY MONUMENTS AND CONTROL POINTS. REPLACE DAMAGED SURVEY MONUMENTS.
16. PROVIDE TRAFFIC CONTROL IN ACCORDANCE WITH SPECIFICATION SECTION 01570.
17. ALL BENDS 45° OR LESS AND TEE RUNS SHALL HAVE A MINIMUM OF 18 FT OF RESTRAINED PIPE LENGTH ON EACH SIDE OF FITTING UNLESS OTHERWISE NOTED.
18. COMPLY WITH OAR CHAPTER 333 RULES FOR REQUIRED WATERLINE-SEWER LINE SEPARATION AND CROSSING REQUIREMENTS. SEE SPECIFICATION SECTION 02600 FOR PIPE INSTALLATION REQUIREMENTS. CENTER WHOLE WATER PIPE SECTION WHERE THE WATERLINE CROSSES UNDER THE SEWER LINE. EXPOSE THE SEWER PIPE TO THE NEAREST JOINTS FOR INSPECTION. REPAIR ANY SEWER LINES AS DIRECTED.
19. AT THE END OF EACH WORK DAY ALL OPEN TRENCHES SHALL BE BACKFILLED, TEMPORARY PAVED OR AC COLD PATCHED WITHIN STREETS TO THE SATISFACTION OF THE CITY OF VENETA.
20. PROVIDE TEMPORARY CONNECTIONS, BLOWOFFS AND THRUST RESTRAINTS AS REQUIRED TO FACILITATE FLUSHING, TESTING AND DISINFECTION. AT COMPLETION OF DISINFECTION, REMOVE TEMPORARY TEST TAPS AND REPLACE WITH TEMPORARY PLUGS UNTIL CONNECTIONS TO EXISTING FACILITIES ARE COMPLETE.
21. THE CONTRACTOR SHALL COMPLY WITH ALL CITY OF VENETA REQUIREMENTS FOR WORK IN AND RESTORATION OF CITY STREETS AND PUBLIC RIGHT-OF-WAYS.
22. CONCRETE FOR PIPELINE ENCASEMENT, CONCRETE CAP, AND REPAIR OF ANY DAMAGED SIDEWALKS, CURB, OR GUTTERS:
    - 28 DAY COMPRESSIVE STRENGTH 3,000 PSI WHEN CURED AND TESTED IN ACCORDANCE WITH ASTM C31 AND C39
    - COARSE AGGREGATE SIZE: 3/4" MAXIMUM IN ACCORDANCE WITH ASTM C33
    - WATER/CEMENT RATIO: 0.55
    - SLUMP: 3" TO 5"
    - MINIMUM CEMENT CONTENT OR COMBINED CEMENT PLUS FLY ASH: 500 POUNDS PER CUBIC YARD
    - AIR ENTRAINMENT: 4 TO 6% IN ACCORDANCE WITH ASTM C260
    - FLY ASH: ASTM C618, CLASS C OR F
23. PROTECT SURROUNDING AREA OUTSIDE THE TRENCH FROM DAMAGE. CONTRACTOR IS RESPONSIBLE FOR REPAIR OF DAMAGED UTILITY TRENCHES AND ANY ASSOCIATED PAVEMENT REPAIR.
24. PROVIDE PIPE WITH PUSH ON JOINTS UNLESS OTHERWISE NOTED.
25. DEFLECT PIPE AS NEEDED TO MAINTAIN PLAN ALIGNMENT. (MAX 4° DEFLECTION PER STICK OF PIPE)

LEGEND

- PROPERTY BOUNDARY LINE
- EXISTING EDGE OF ASPHALT CONCRETE
- CENTERLINE
- EXISTING STORM SEWER
- EXISTING WASTEWATER SEWER
- EXISTING WATERLINE
- EXISTING OVERHEAD LINES
- EXISTING POWER POLE
- EXISTING GUY WIRE
- EXISTING WATER METER
- EXISTING WATER VALVE
- EXISTING FIRE HYDRANT
- EXISTING CONCRETE
- EXISTING CATCH BASIN
- EXISTING STORM WATER MANHOLE
- EXISTING WASTEWATER MANHOLE
- SAWCUT LINE
- PROPOSED WATER LINE
- PROPOSED WATER VALVE
- PROPOSED FIRE HYDRANT

CONSTRUCTION NOTES

1. SAWCUT AND REMOVE EXISTING PAVEMENT AND REPLACE WITH LIKE MATERIAL PER ODOT STD DWG RD302 (SEE SHEET C5). PROVIDE 3" THICKNESS OF LEVEL 2 ASPHALT FOR PAVEMENT REPLACEMENT, OVER 12" CRUSHED ROCK.
2. CONSTRUCT 8" STANDARD CLASS 52 DUCTILE IRON WATER PIPE. WATERLINE TRENCH PER PER ODOT STANDARD DRAWING RD300. SEE SHEET C3. BACKFILL CLASS "B". DEFLECT PIPE AT JOINTS AS REQUIRED TO ACHIEVE ALIGNMENT. PROVIDE MECHANICAL JOINT THRUST RESTRAINT. MINIMUM 30" COVER.
3. INSTALL 11.25° MV BEND.
4. CONNECT NEW 8" WATERLINE TO EXISTING AC 6" WATERLINE. INSTALL NEW 8"MJxFL GATE VALVES. RESTRAIN ALL JOINTS.
5. HOT TAP EXISTING 8" ASBESTOS CEMENT WATERLINE WITH TAPING SLEEVE (8"X8" MUELLER WITH MECHANICAL JOINT TAPPING SLEEVE OR APPROVED EQUAL) AND 8" TAPPING VALVE (MUELLER RESILIENT WEDGE TAPPING VALVE OR APPROVED EQUAL). PROVIDE MECHANICAL JOINT THRUST RESTRAINT.
6. FURNISH AND INSTALL 8"X6" TEE. PROVIDE MECHANICAL THRUST RESTRAINT.
7. FURNISH AND INSTALL FIRE HYDRANT ASSEMBLY (MUELLER 5 ¼" A423 SUPER CENTURION "250" WITH TWO HOSE NOZZLES AND ONE PUMPER NOZZLE WITH 4" INTEGRAL STORZ CONNECTION) AND 6" GATE VALVE (MULLER A-2361 RESILIENT WEDGE GATE VALVE). HYDRANT TO BE PAINTED YELLOW WITH APPROVED PAINT. SEE CITY OF VENETA STANDARD DRAWING, SHEET C3.
8. INSTALL NEW 1" SERVICE CONNECTION FROM 8" MAIN TO EXISTING WATER METER. SEE CITY OF VENETA STANDARD DRAWING, SHEET C4. 8" SERVICE SADDLE (ROMAC INDUSTRIES 202N SERVICE SADDLE) FOR PVC WATER MAIN IS REQUIRED. USE 1" MUELLER BALL CORPORATION VALVE B-25029 AND 1" ADS POTABLE WATER SERVICE PIPE (IPS) SIDR 7 FOR SERVICE LINE.
9. FURNISH AND INSTALL NEW WATER METER BOX, WATER METER LID, NEW WATER METER, 1" ANGLE METER VALVE, AND BALL METER VALVE. CONNECT EXISTING WATER SERVICE LINE TO NEW SERVICE LINE WITH APPROPRIATE FITTINGS. SEE CITY OF VENETA STANDARD DRAWING SHEET C4.
10. POTHOLE EXISTING UTILITY LINE AND AND VERIFY LOCATION, DEPTH, MATERIAL AND SIZE. NOTIFY ENGINEER OF ANY DISCREPANCIES.
11. PROPOSED WATERLINE TO GO UNDER EXISTING STORM LINE. PROVIDE 45° VERTICAL BENDS WITH MECHANICAL RESTRAINT TO ACHIEVE GOING UNDER PROPOSED STORM LINE.
12. FURNISH AND INSTALL WATER VALVE BOX PER VENETA STANDARD DRAWING.
13. REPLACE CONCRETE SIDEWALK SECTION, 4" CONCRETE OVER 4" CRUSHED ROCK PER DETAIL RD720, SHEET C7.

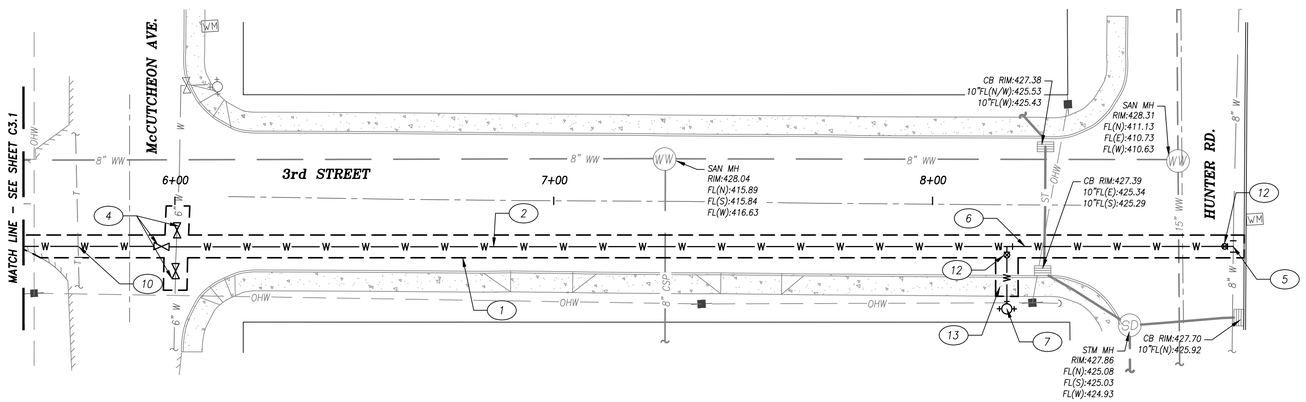

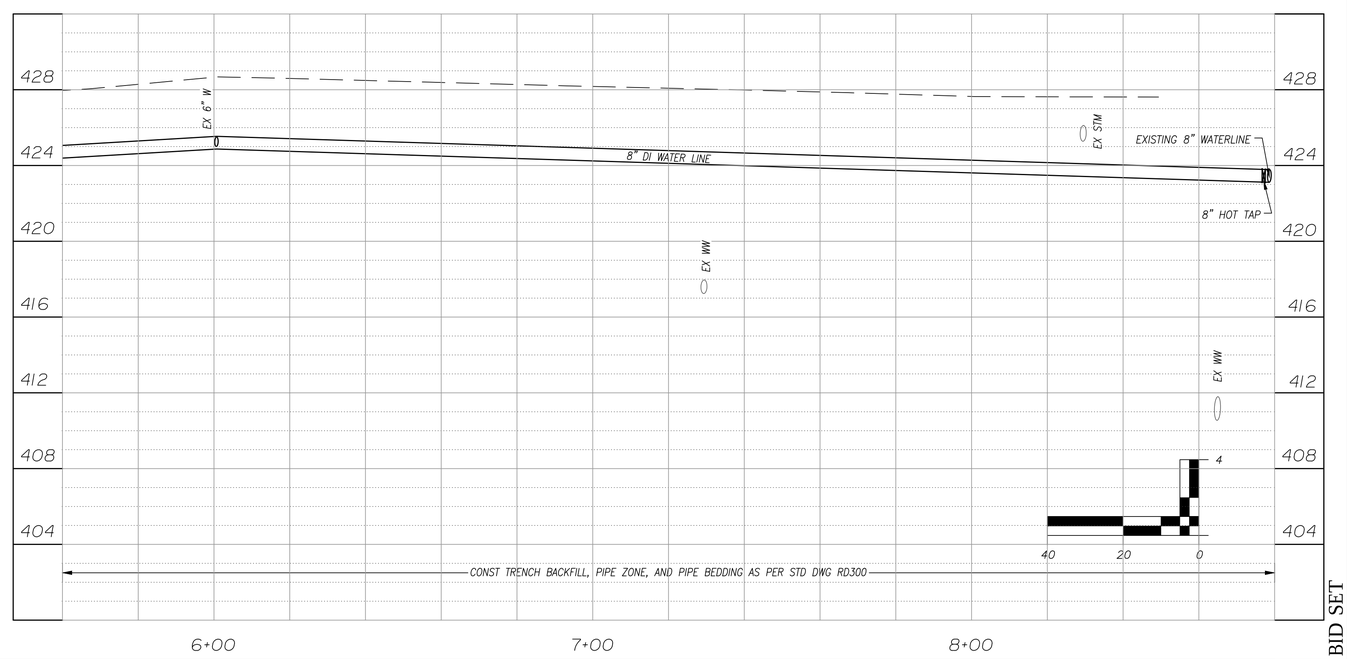

INSPECTION NOTES

1. CITY WILL CONTRACT WITH A SPECIAL INSPECTOR. CONTRACTOR IS RESPONSIBLE TO COORDINATE SPECIAL INSPECTIONS.
2. COORDINATE PERIODIC CITY INSPECTIONS AND COMPACTION TESTING FOR THE BEDDING, PIPE ZONE BACKFILL, AND TRENCH BACKFILL EVERY 200'.
3. SEE TABLE FOR REQUIRED INSPECTIONS.

WATER CONSTRUCTION NOTES

1. CONTRACTOR SHALL BE RESPONSIBLE FOR PROPER HANDLING AND DISPOSAL OF ALL ASBESTOS CEMENT PIPE.
2. ALL WATER CONNECTIONS TO EXISTING WATER MAINS SHALL BE IN ACCORDANCE WITH THE RECOMMENDATIONS OF THE PIPE MANUFACTURER AND APPROPRIATE AWWA STANDARDS FOR WATER INSTALLATION.

REQUIRED INSPECTIONS

ITEM	CITY (PERIODIC)	SPECIAL INSPECTOR
PREPARED SUBGRADE PRIOR TO PLACING ANY BEDDING MATERIAL BELOW PIPE OR VAULTS	X	
COMPACTED BEDDING MATERIAL BELOW PIPE OR VAULTS	X	X
PIPE, VALVE, AND VAULT INSTALLATION PRIOR TO BACK FILLING	X	
COMPACTED PIPE ZONE BACKFILL	X	X
COMPACTED TRENCH ZONE BACKFILL	X	X
EXISTING SEWER PIPE WHERE THE WATER PIPE CROSSES BELOW	X	
COMPACTED TRENCH AND VAULT BACKFILL	X	X
PREPARED ROAD SUBGRADE	X	X
TEMPORARY PAVING	X	
FINAL PAVING	X	

BID SET

Branch ENGINEERING Inc.
Since 1977
civil • transportation
structural • geotechnical
SURVEYING
310 5th Street
Springfield, OR 97477
p: 541.746.0637
www.BranchEngineering.com
Springfield OR | Salem OR

REGISTERED PROFESSIONAL ENGINEER #52996 OREGON FEBRUARY 4, 2014 MICHAEL LANE BRANCH

Digitally signed by M. Lane Branch
Date: 2016.06.24 08:10:47 -07'00'

EXPIRES: DECEMBER 31, 2017

project title:

2ND & 3RD STREET IMPROVEMENTS

CITY OF VENETA
VENETA, OREGON

revisions:

date:	JUNE 24, 2016
drawn by:	MD
designer:	MLB
project no:	16-006b

WATERLINE PLAN & PROFILE McCUTCHEON TO HUNTER

sheet: C3.2

Z:\2016\16-006b 3rd Street Water Line\Drawings\16-006 3rd Street Water.dwg 6/23/2016 3:25 PM MARISSA

copyright © 2016 Branch Engineering, Inc.

LEGEND

- PROPERTY/RIGHT OF WAY LINE
- CURB – PROPOSED
- ST — STORM SEWER – EXISTING
- SD — STORM SEWER – PROPOSED
- WW — EXISTING WASTEWATER SEWER
- OHL — EXISTING OVERHEAD WIRE
- E — ELECTRICAL CONDUIT – PROPOSED
- T — EXISTING TELEPHONE/CABLE LINE
- EXISTING FENCE
- W — WATER PIPE – PROPOSED
- EXISTING CATCH BASIN
- EXITING POWER POLE
- EB — ELECTRIC BOXES FOR FUTURE STREET LIGHTS
- SIGN
- WM — WATER METER
- WATER VALVE
- EM — ELECTRIC METER
- NEW CONCRETE SIDEWALK
- NEW AC
- 2" MILL WITH 2" AC OVERLAY PER DETAIL C7.
- NEW DRIVEWAY APPROACH
- NEW PLANTER STRIP/LANDSCAPING
- EXISTING BUILDING

GRAPHIC SCALE

10 0 5 10 20

(IN FEET)

NOTES

1. THIS DOES NOT CONSTITUTE A BOUNDARY SURVEY AND IS SUBJECT TO ANY INACCURACIES A SUBSEQUENT SURVEY MAY DISCLOSE.
2. LOCATIONS OF UNDERGROUND UTILITIES SHOWN ARE BASED ON A COMBINATION OF VISIBLE FACILITIES LOCATED ABOVE GROUND AND UTILITY LOCATE MARKS. NO CERTIFICATION IS MADE TO ACTUAL LOCATION OF UNDERGROUND UTILITIES.
3. CONTRACTOR SHALL VERIFY ALL STORM GRADES PRIOR TO CONSTRUCTION. NOTIFY ENGINEER IF DIFFERENT THAN NOTED IN THE PLANS.
4. TAX LOTS SHOWN ARE APPROXIMATE.

CONSTRUCTION NOTES

1. RELOCATE EXISTING FENCE TO BEHIND WALK.
2. ADJUST WW MANHOLE FRAME TO MATCH FINISHED GRADE PER ODOT STANDARD DRAWING RD360, SHEET C5, WITH SQUARE OR CIRCLE CONCRETE FRAME PER PLANS AND ODOT STANDARD DETAIL RD360. IF POSSIBLE ROTATE LID AWAY FROM CURB LINE.
3. CONSTRUCT 4" AC OVER 12" AGGREGATE BASE PER DETAIL SHEET C9.
4. CONSTRUCT THICKENED CURB AND GUTTER THROUGH SAND FILTER AREA PER DETAIL, SHEET C8.
5. CONSTRUCT CURB AND GUTTER PER ODOT STANDARD DRAWING RD700, SHEET C9.
6. CONSTRUCT 4" THICK SIDEWALK OVER 4" AGGREGATE BASE PER ODOT STANDARD DRAWING RD720, SHEET C7.
7. ROADWAY CROWN. SEE GRADING PLAN FOR MORE INFORMATION.
8. PROVIDE SMOOTH TRANSITION FROM OLD CONCRETE TO NEW CONCRETE – NO ABRUPT ANGLE POINTS.
9. CONSTRUCT DRIVEWAY APRON PER ODOT STANDARD DRAWING RD750 (OPTION N), WITH $\frac{3}{4}$" LIP PER GRADING PLANS.
10. EXTEND DRIVEWAY TRANSITION IMPROVEMENTS PER PLAN. MATCH EXISTING PAVEMENT MATERIAL FOR EACH DRIVEWAY. SEE GRADING PLAN FOR ADDITIONAL INFORMATION.
11. CONSTRUCT ADA RAMP IN COMPLIANCE WITH ADA GUIDELINES. SEE ODOT DETAILS, SHEET C7.
12. INSTALL CONCRETE STEP TO EXISTING CONCRETE WALK AT PATHWAY CONNECTION TO SIDEWALK. SEE GRADING CALLOUTS FOR SPECIFIC GRADES.
13. REPLACE PANELS DISTURBED BY UTILITY POLE REMOVAL. INSTALL NEW CONCRETE SIDEWALK SECTION, MATCH EXISTING GRADES AND PAVEMENT SECTION.
14. INSTALL CURB CUT SPILLWAY PER CITY OF PORTLAND STD DETAIL SW–330, SHEET C8. INCLUDE ROCK SPLASH PAD WHEN SHOWN ON PLANS.
15. INSTALL SAND FILTER AND WALLS PER DETAIL SHEET C8. TOP GRADE NOTES TOP OF RIVER ROCK LAYER. BOTTOM GRADE NOTES THE BOTTOM OF THE OPEN GRADED DRAIN ROCK
16. INSTALL CURB WALL PER DETAIL SHEET C8. INSTALL CURB CUTS FOR DRAINAGE INTO SAND FILTER PER DETAIL AND GRADING PLAN.
30. CONSTRUCT NEW CATCH BASIN AND CONNECT STORM DRAIN PIPE PER ODOT STANDARD DRAWING RD378 SHEET C6 AND RD339 SHEET C5. CONFIRM STORM STRUCTURES AND PIPES IN THE AREA BEFORE INSTALLATION AND CONSULT WITH ENGINEER FOR CONNECTING TO STORM SYSTEM.
31. CONSTRUCT 8" 3034 PVC STORM DRAIN PIPE PER ODOT STANDARD DRAWING RD300, SHEET C5.
32. CONSTRUCT 10" 3034 PVC STORM DRAIN PIPE PER ODOT STANDARD DRAWING RD300, SHEET C5.
33. CONSTRUCT 12" 3034 PVC STORM DRAIN PIPE PER ODOT STANDARD DRAWING RD300, SHEET C5.
34. FURNISH AND INSTALL 12" DIAMETER CONCRETE BASIN PER REVISED ODOT STANDARD DETAIL RD374 SHEET C6 WITH BEEHIVE ATRIUM INLET GRATE PER CITY OF PORTLAND STANDARD DETAIL SW–350, SHEET C8.
35. INSTALL SHALLOW MANHOLE PER ODOT STANDARD DETAIL RD342 TO REPLACE EXISTING CATCH BASIN STRUCTURE. CONNECT ALL EXISTING PIPE STRUCTURES TO MANHOLE. CONFIRM FLOW LINES PRIOR TO INSTALLATION. LOCATE MANHOLE COVER AWAY FROM CURB LINE. INSTALL CONCRETE COLLAR PER DETAIL RD360.
36. CONFIRM STRUCTURE TYPE AND FLOW LINES. ADJUST STM MANHOLE RIM TO MATCH FINISHED GRADE PER ODOT STANDARD DRAWING RD360, SHEET C5, WITH SQUARE OR CIRCLE CONCRETE FRAME PER PLANS.
37. POTENTIAL UTILITY CONFLICT. NOTIFY ENGINEER OF EXISTING STORM LINE AFTER POTHOLING BEFORE NEW STORM INFRASTRUCTURE INSTALLATION.
38. INSTALL 6" STORM PIPE FROM STRUCTURE TO BACK OF SIDEWALK AND CAP FOR FUTURE EXTENSION.
39. FURNISH AND INSTALL 24" DIAMETER MANHOLE PER ODOT STANDARD DETAIL RD342 WITH BEEHIVE ATRIUM GRATE PER CITY OF PORTLAND STANDARD DETAIL SW350 SHEET C8. INLETS INTO MANHOLE MAYBE TIGHT. COORDINATE ACCEPTABLE ALLOWANCES WITH MANUFACTURER AND ENGINEER PRIOR TO ORDERING MATERIALS.
40. UTILITY POLE RELOCATION SHALL BE DONE BY UTILITY COMPANY. CONTRACTOR SHALL COORDINATE SCHEDULING POLE RELOCATION WITH CITY AND UTILITY COMPANIES.

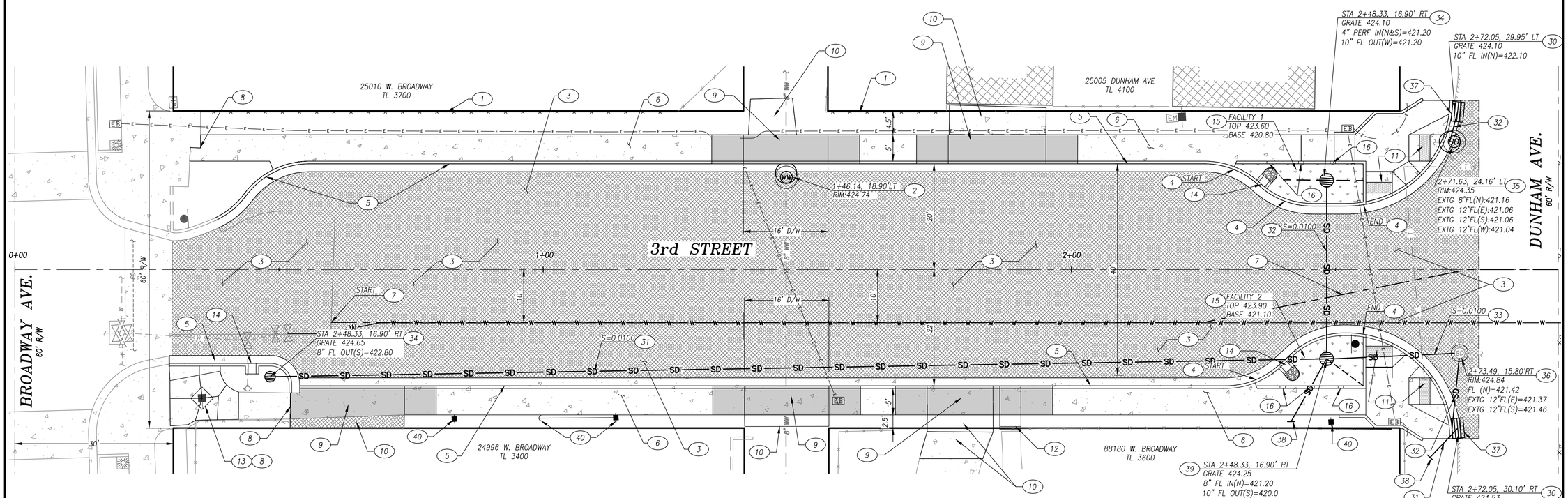

BID SET

Branch ENGINEERING Inc.
Since 1977
civil • transportation
structural • geotechnical
SURVEYING
1462 COMMERCIAL ST. NE
Salem, OR 97301
p: 503.740.0637
www.BranchEngineering.com
Springfield OR | Salem OR

REGISTERED PROFESSIONAL ENGINEER #52996 M. LANE BRANCH OREGON FEBRUARY 4, 1997 MICHAEL LANE BRANCH

Digitally signed by M. Lane Branch
Date: 2016.06.24 08:11:36 -07'00'

EXPIRES: DECEMBER 31, 2017

project title:

2ND & 3RD STREET IMPROVEMENTS

CITY OF VENETA
88184 8TH STREET
VENETA, OREGON

revisions:

date:	JUNE 24, 2016
drawn by:	MJD
designer:	NBP
project no:	15-006a

3RD STREET PAVING AND UTILITY PLAN

sheet: C3.3

Z:\2015\15-006a 2nd & 3rd Street Veneta\Drawings\15-006a 3rd Street.dwg 6/23/2016 2:23 PM MARISSA

copyright © 2015 Branch Engineering, Inc.

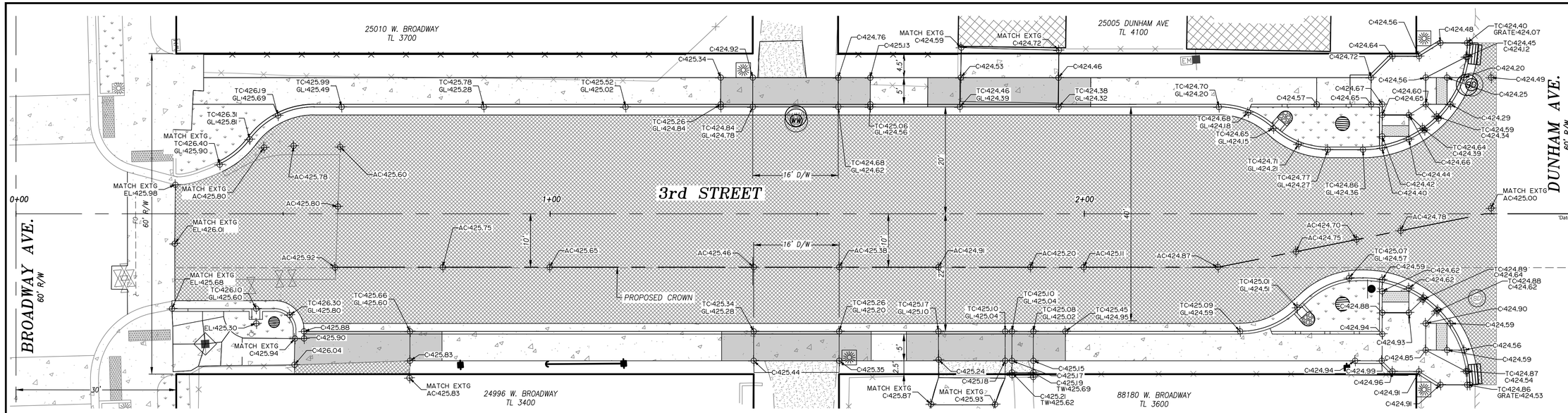

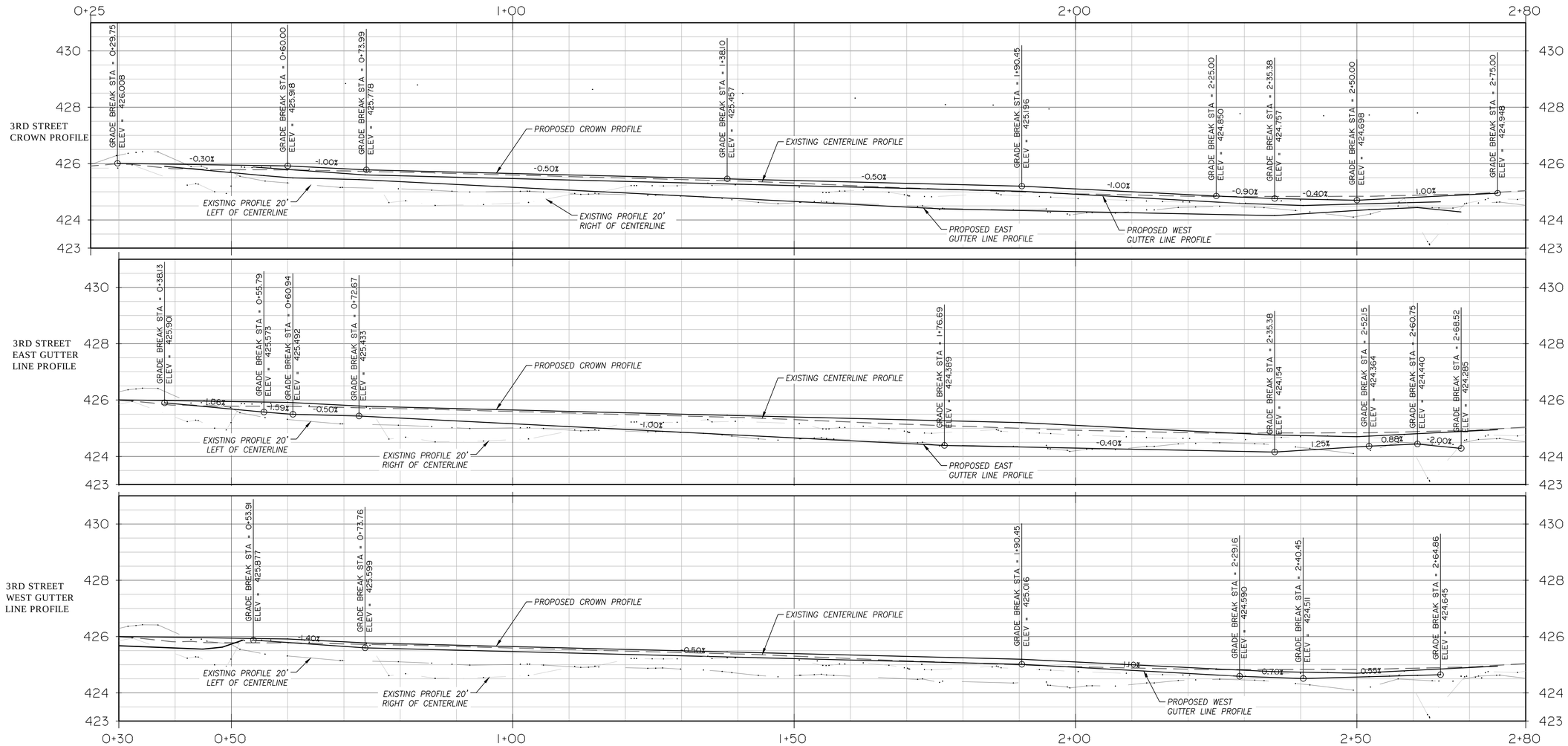

BID SET

Branch ENGINEERING Inc
Since 1977
civil • transportation
structural • geotechnical
SURVEYING
1462 COMMERCIAL ST. NE
Salem, OR 97301
p: 503.746.0637
www.BranchEngineering.com
Springfield OR | Salem OR

REGISTERED PROFESSIONAL ENGINEER #52996 OREGON FEBRUARY 8, 2016 MICHAEL LANE BRANCH

Digitally signed by M. Lane Branch
Date: 2015.06.24 01:23:47 -07'00'
M. Lane Branch

EXPIRES: DECEMBER 31, 2017

project title:

2ND & 3RD STREET IMPROVEMENTS

CITY OF VENETA
88184 8TH STREET
VENETA, OREGON

revisions:

date:	JUNE 24, 2016
drawn by:	NBP
designer:	NBP
project no:	15-006a

3RD STREET GRADING AND PAVING PLAN & PROFILE

sheet:

C3.4

Z:\2015\15-006a 2nd & 3rd Street Veneta\Drawings\15-006A_2nd&3rd ST_C3D.dwg 6/23/2016 2:29 PM MARISSA

copyright © 2015 Branch Engineering, Inc.

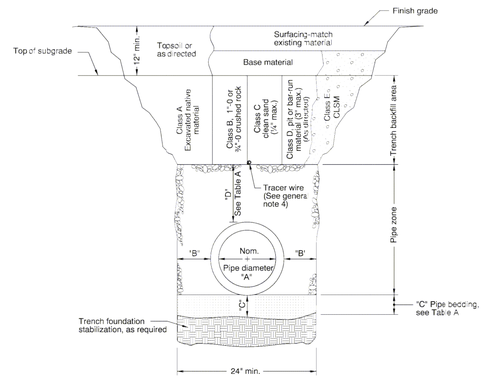

MULTIPLE INSTALLATIONS

DIAMETER	MIN. SPACE BETWEEN PIPES
Up to 48"	24"
48" to 72"	One half (½) dia. of pipe

TABLE A

"A" (in)	"B" (in)	"C" (in)	"D" (in)
4	10	4	8
6	10	4	8
8	10	6	10
10	10	6	10
12	12	6	10
15	12	6	10
18	16	6	12
21	16	6	12
24	18	6	12
30	18	6	12
36	24	6	14
42	24	6	14
48	24	6	14
54	24	6	14
60	24	6	14
66	24	6	14
72	24	6	14

For pipes over 72" diameter, see general note 3.

GENERAL NOTES FOR ALL DETAILS:

1. Surfacing of paved areas shall comply with street cut Std. Drg. RD302.
2. For pipe installation in embankment areas where the trench method will not be used and the pipe is ≥ 36" diameter, increase dimension "B" to nominal pipe diameter.
3. Pipes over 72" diameter are structures, and are not applicable to this drawing.
4. See Std. Drg. RD336 for tracer wire details (When required).

CALC. BOOK NO. N/A | BASELINE REPORT DATE 14-JUL-2014

The selection and use of this Standard Drawing, while designed in accordance with generally accepted engineering principles and practices, is the sole responsibility of the user and should not be used without consulting a Registered Professional Engineer.

NOTE: All material and workmanship shall be in accordance with the current Oregon Standard Specifications

OREGON STANDARD DRAWINGS

TRENCH BACKFILL, BEDDING, PIPE ZONE AND MULTIPLE INSTALLATIONS

2015

DATE	REVISION DESCRIPTION

rd300.dgn 14-JUL-2014

RD300

Effective Date: June 1, 2016 - November 30, 2015 RD300

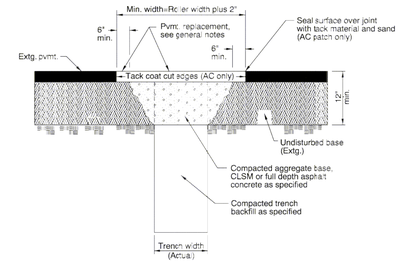

GENERAL NOTES FOR ALL DETAILS:

1. All existing AC or PCC pavement shall be sawcut prior to repaving.
2. Concrete pavement shall be replaced with concrete to a minimum thickness of 6" or to the thickness of removed pavement, whichever is greater.
3. Place AC mix minimum thkn. of 4" or the thkn. of the removed pavement, whichever is greater. Compact as specified.

CALC. BOOK NO. N/A | BASELINE REPORT DATE 12-JUN-2008

The selection and use of this Standard Drawing, while designed in accordance with generally accepted engineering principles and practices, is the sole responsibility of the user and should not be used without consulting a Registered Professional Engineer.

NOTE: All material and workmanship shall be in accordance with the current Oregon Standard Specifications

OREGON STANDARD DRAWINGS

STREET CUT

2015

DATE	REVISION DESCRIPTION

rd302.dgn 14-JUL-2014

RD302

Effective Date: June 1, 2016 - November 30, 2015 RD302

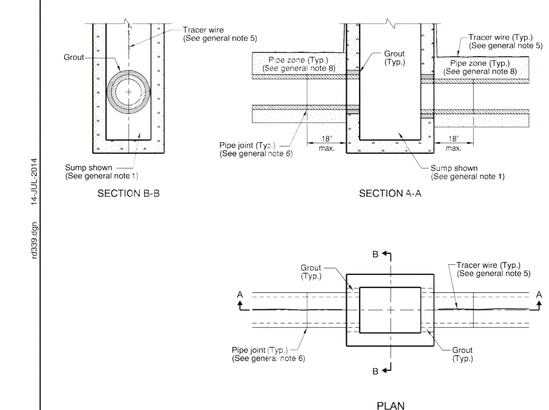

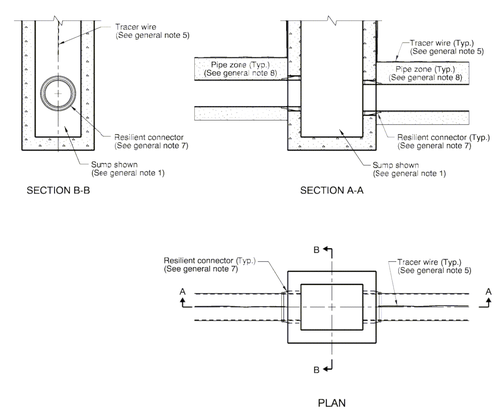

GENERAL NOTES FOR ALL DETAILS:

1. See Std. Drgs. RD364, RD365, and RD366 for inlet details not shown.
2. See appropriate standard drawings or special project details for other similar structures.
3. Location, elevation, diameter, slope, and number of pipe(s) varies, see project plans.
4. Max. pipe diameter varies with pipe material.
5. All connecting pipes shall have a tracer wire, or approved alternate. See Std. Drg. RD336 for tracer wire details.
6. When rigid pipe is used, the connecting pipe shall have a flexible, gasketted and unrestrained joint within 18" of manhole wall. Joint type varies with manufacturer.
7. When flexible pipe is used, install resilient connectors conforming to requirements of ASTM C923.
8. Pipe zone varies, see Std. Drg. RD300.

CALC. BOOK NO. N/A | BASELINE REPORT DATE 14-JUL-2014

The selection and use of this Standard Drawing, while designed in accordance with generally accepted engineering principles and practices, is the sole responsibility of the user and should not be used without consulting a Registered Professional Engineer.

NOTE: All material and workmanship shall be in accordance with the current Oregon Standard Specifications

OREGON STANDARD DRAWINGS

PIPE TO STRUCTURE CONNECTIONS

2015

DATE	REVISION DESCRIPTION

rd339.dgn 14-JUL-2014

RD339

Effective Date: June 1, 2016 - November 30, 2015 RD339

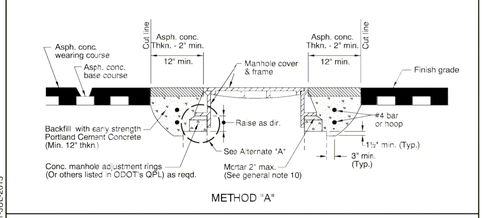

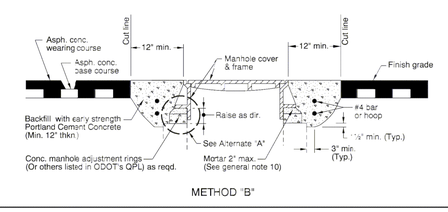

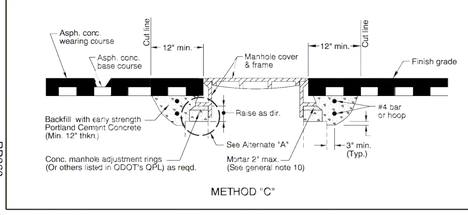

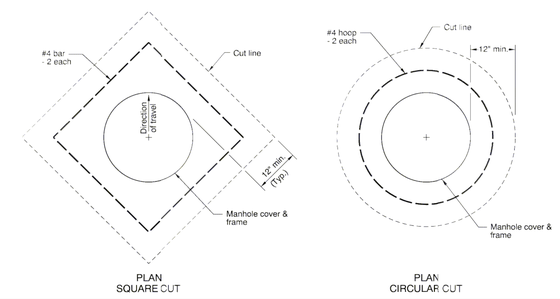

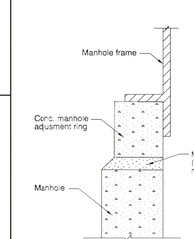

GENERAL NOTES FOR ALL DETAILS:

1. Cover manhole with building paper and const. asph. conc. base course and wearing courses.
2. Saw cut square or circular excavation around manhole 12" min. from manhole frame.
3. Raise manhole cover and frame to finish grade by installing conc. manhole adjustment rings and leveling mortar, as shown.
4. Backfill with early strength Portland Cement Concrete. All concrete shall be commercial grade concrete.
5. Protect from traffic loading until conc. has cured to 3000 psi.
6. Apply tack coat to edges of existing pavement before installing patch.
7. Finish joint with asphalt seal and sand.
8. See Std. Drg. RD336 for manhole steps details.
9. See appropriate manhole standard drawings for details not shown.
10. Use epoxy for synthetic grade rings.
11. See Std. Drg. RD336 for tracer wire details.
12. See Std. Drg. RD356 for manhole covers and frames.

CALC. BOOK NO. N/A | BASELINE REPORT DATE 21-JUL-2015

The selection and use of this Standard Drawing, while designed in accordance with generally accepted engineering principles and practices, is the sole responsibility of the user and should not be used without consulting a Registered Professional Engineer.

NOTE: All material and workmanship shall be in accordance with the current Oregon Standard Specifications

OREGON STANDARD DRAWINGS

MANHOLE FRAME ADJUSTMENT

2015

DATE	REVISION DESCRIPTION
07-2015	ADDED DETAIL & REVISED NOTES

rd360.dgn 21-JUL-2015

RD360

Effective Date: June 1, 2016 - November 30, 2015 RD360

Branch ENGINEERING Inc
Since 1977
civil • transportation
structural • geotechnical
SURVEYING
310 5th Street
Springfield, OR 97477
p: 541.746.0637
www.BranchEngineering.com
Springfield OR | Salem OR

REGISTERED PROFESSIONAL ENGINEER #52996 M. Lane Branch OREGON FEBRUARY 4, 2014 MICHAEL LANE BRANCH

Digitally signed by M. Lane Branch
Date: 2016.06.24 08:13:24 -07'00'

EXPIRES: DECEMBER 31, 2017

project title:

2ND & 3RD STREET IMPROVEMENTS

CITY OF VENETA
88184 8TH STREET
VENETA, OREGON

revisions:

date: JUNE 24, 2016
drawn by: MJD/ARS
designer: MLB
project no: 15-006a

DETAILS

BID SET

sheet: C5

Z:\2015\15-006a 2nd & 3rd Street Veneta\Drawings\15-006A 2nd&3rd Street DETAILS.dwg 6/23/2016 2:15 PM MARISSA

copyright © 2015 Branch Engineering, Inc.

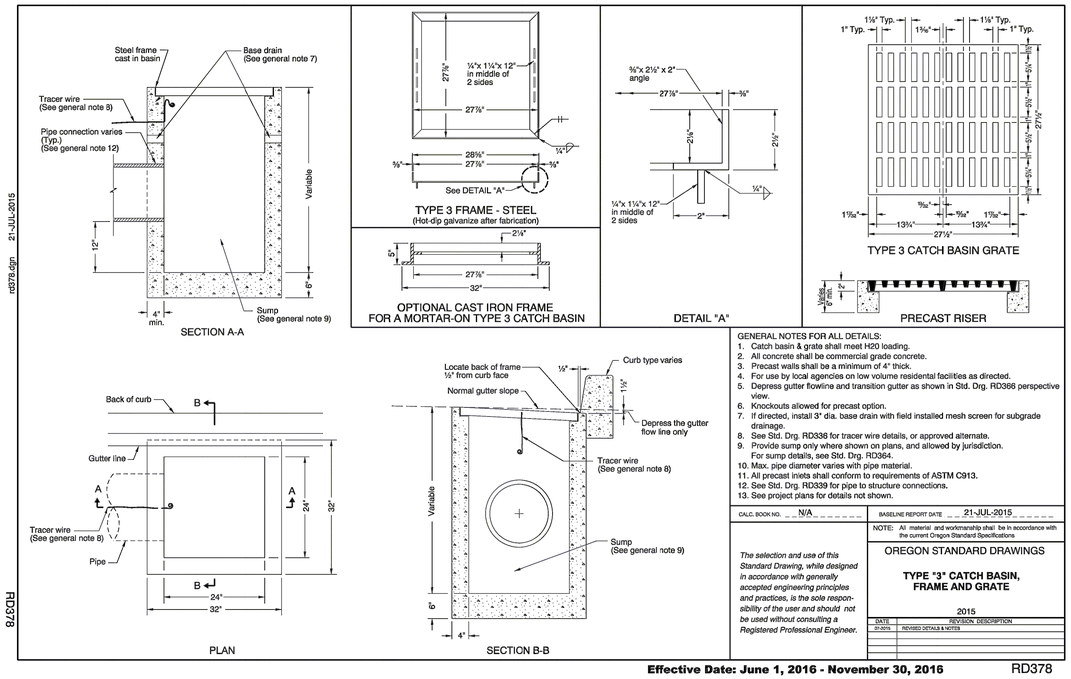

GENERAL NOTES FOR ALL DETAILS:

1. Catch basin & grate shall meet H20 loading.
2. All concrete shall be commercial grade concrete.
3. Precast walls shall be a minimum of 4" thick.
4. For use by local agencies on low volume residential facilities as directed.
5. Depress gutter flowline and transition gutter as shown in Std. Drg. RD366 perspective view.
6. Knockouts allowed for precast option.
7. If directed, install 3" dia. base drain with field installed mesh screen for subgrade drainage.
8. See Std. Drg. RD336 for tracer wire details, or approved alternate.
9. Provide sump only where shown on plans, and allowed by jurisdiction. For sump details, see Std. Drg. RD364.
10. Max. pipe diameter varies with pipe material.
11. All precast inlets shall conform to requirements of ASTM C913.
12. See Std. Drg. RD339 for pipe to structure connections.
13. See project plans for details not shown.

CALC. BOOK NO. N/A — BASELINE REPORT DATE 21-JUL-2015

NOTE: All material and workmanship shall be in accordance with the current Oregon Standard Specifications

The selection and use of this Standard Drawing, while designed in accordance with generally accepted engineering principles and practices, is the sole responsibility of the user and should not be used without consulting a Registered Professional Engineer.

OREGON STANDARD DRAWINGS

TYPE "3" CATCH BASIN, FRAME AND GRATE

2015

DATE	REVISION DESCRIPTION
01-2015	REVISED DETAILS & NOTES

rd378.dgn 21-JUL-2015

RD378

Effective Date: June 1, 2016 - November 30, 2016 RD378

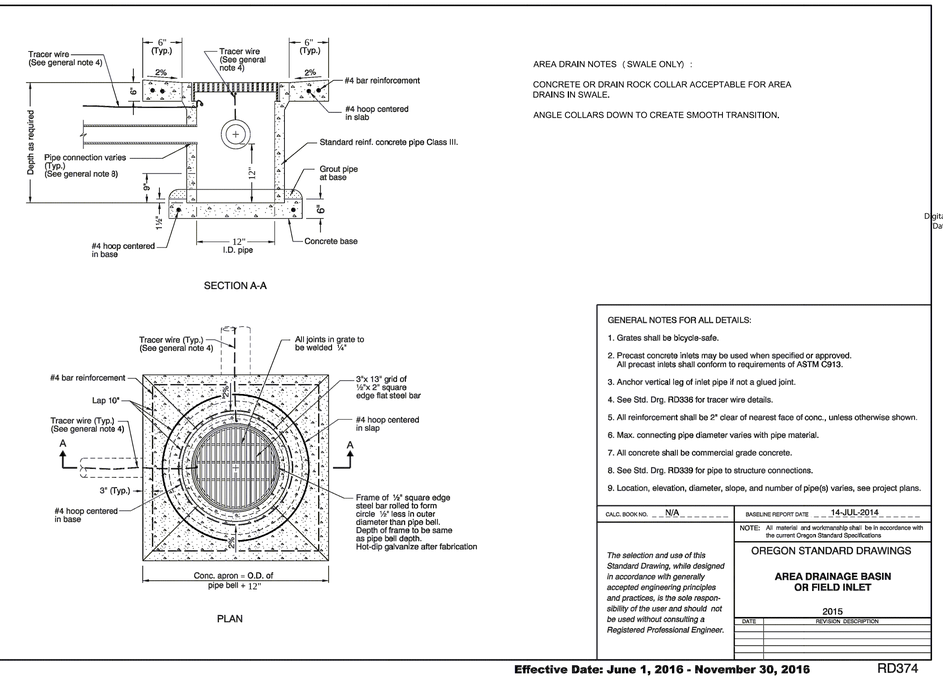

AREA DRAIN NOTES (SWALE ONLY):

CONCRETE OR DRAIN ROCK COLLAR ACCEPTABLE FOR AREA DRAINS IN SWALE.

ANGLE COLLARS DOWN TO CREATE SMOOTH TRANSITION.

GENERAL NOTES FOR ALL DETAILS:

1. Grates shall be bicycle-safe.
2. Precast concrete inlets may be used when specified or approved. All precast inlets shall conform to requirements of ASTM C913.
3. Anchor vertical leg of inlet pipe if not a glued joint.
4. See Std. Drg. RD336 for tracer wire details.
5. All reinforcement shall be 2" clear of nearest face of conc., unless otherwise shown.
6. Max. connecting pipe diameter varies with pipe material.
7. All concrete shall be commercial grade concrete.
8. See Std. Drg. RD339 for pipe to structure connections.
9. Location, elevation, diameter, slope, and number of pipe(s) varies, see project plans.

CALC. BOOK NO. N/A — BASELINE REPORT DATE 14-JUL-2014

NOTE: All material and workmanship shall be in accordance with the current Oregon Standard Specifications

The selection and use of this Standard Drawing, while designed in accordance with generally accepted engineering principles and practices, is the sole responsibility of the user and should not be used without consulting a Registered Professional Engineer.

OREGON STANDARD DRAWINGS

AREA DRAINAGE BASIN OR FIELD INLET

2015

DATE	REVISION DESCRIPTION

rd374.dgn 14-JUL-2014

RD374

Effective Date: June 1, 2016 - November 30, 2016 RD374

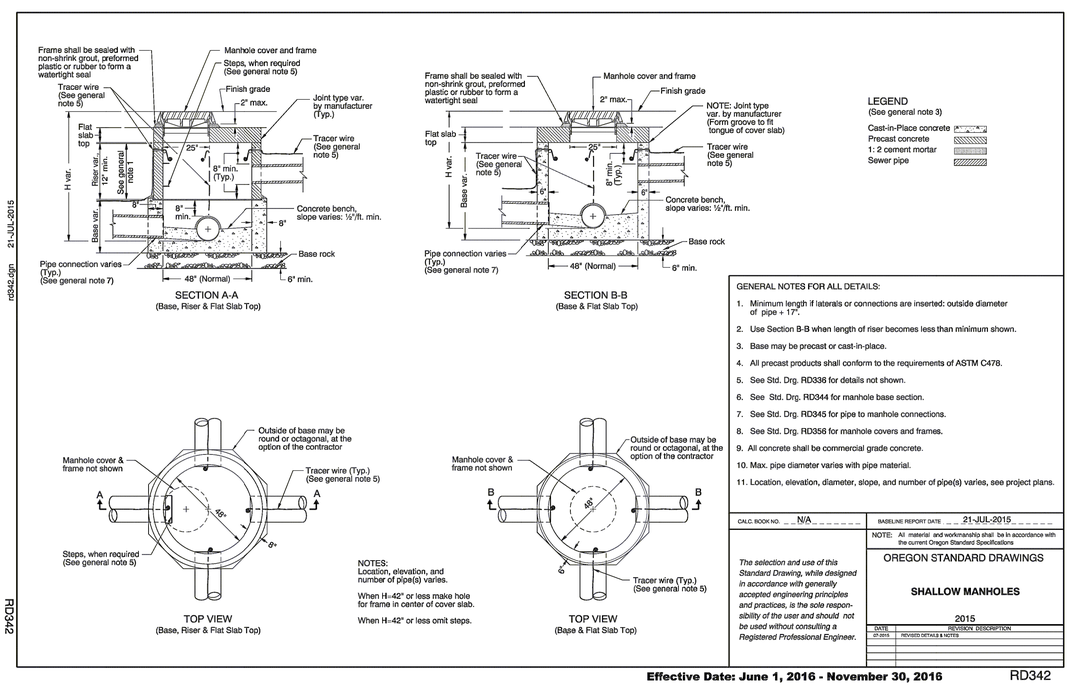

NOTES:
Location, elevation, and number of pipe(s) varies.

When H=42" or less make hole for frame in center of cover slab.

When H=42" or less omit steps.

GENERAL NOTES FOR ALL DETAILS:

1. Minimum length if laterals or connections are inserted: outside diameter of pipe + 17".
2. Use Section B-B when length of riser becomes less than minimum shown.
3. Base may be precast or cast-in-place.
4. All precast products shall conform to the requirements of ASTM C478.
5. See Std. Drg. RD336 for details not shown.
6. See Std. Drg. RD344 for manhole base section.
7. See Std. Drg. RD345 for pipe to manhole connections.
8. See Std. Drg. RD356 for manhole covers and frames.
9. All concrete shall be commercial grade concrete.
10. Max. pipe diameter varies with pipe material.
11. Location, elevation, diameter, slope, and number of pipe(s) varies, see project plans.

CALC. BOOK NO. N/A — BASELINE REPORT DATE 21-JUL-2015

NOTE: All material and workmanship shall be in accordance with the current Oregon Standard Specifications

The selection and use of this Standard Drawing, while designed in accordance with generally accepted engineering principles and practices, is the sole responsibility of the user and should not be used without consulting a Registered Professional Engineer.

OREGON STANDARD DRAWINGS

SHALLOW MANHOLES

2015

DATE	REVISION DESCRIPTION
01-2015	REVISED DETAILS & NOTES

rd342.dgn 21-JUL-2015

RD342

Effective Date: June 1, 2016 - November 30, 2016 RD342

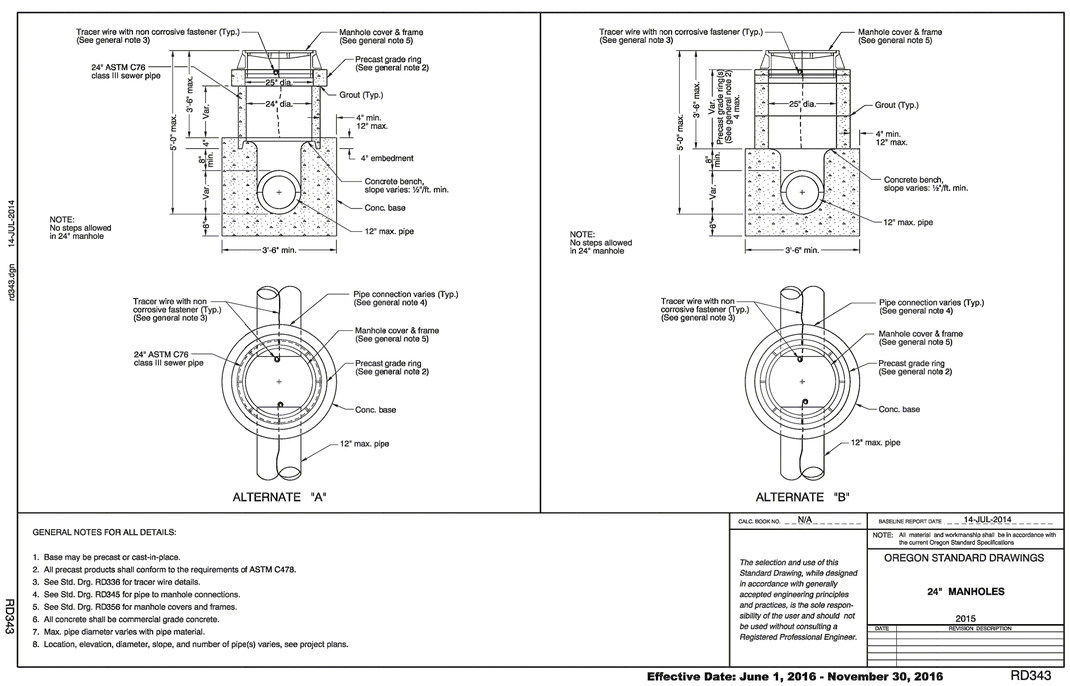

GENERAL NOTES FOR ALL DETAILS:

1. Base may be precast or cast-in-place.
2. All precast products shall conform to the requirements of ASTM C478.
3. See Std. Drg. RD336 for tracer wire details.
4. See Std. Drg. RD345 for pipe to manhole connections.
5. See Std. Drg. RD356 for manhole covers and frames.
6. All concrete shall be commercial grade concrete.
7. Max. pipe diameter varies with pipe material.
8. Location, elevation, diameter, slope, and number of pipe(s) varies, see project plans.

CALC. BOOK NO. N/A — BASELINE REPORT DATE 14-JUL-2014

NOTE: All material and workmanship shall be in accordance with the current Oregon Standard Specifications

The selection and use of this Standard Drawing, while designed in accordance with generally accepted engineering principles and practices, is the sole responsibility of the user and should not be used without consulting a Registered Professional Engineer.

OREGON STANDARD DRAWINGS

24" MANHOLES

2015

DATE	REVISION DESCRIPTION

rd343.dgn 14-JUL-2014

RD343

Effective Date: June 1, 2016 - November 30, 2016 RD343

BID SET

Branch ENGINEERING Inc
Since 1977
civil • transportation
structural • geotechnical
SURVEYING
310 5th Street
Springfield, OR 97477
p: 541.746.0637
www.BranchEngineering.com
Springfield OR | Salem OR

REGISTERED PROFESSIONAL ENGINEER #52996 M. Lane Branch OREGON FEBRUARY 4, 2014 MICHAEL LANE BRANCH

EXPIRES: DECEMBER 31, 2017

Digitally signed by M. Lane Branch
Date: 2016.06.24 08:14:25 -07'00'

project title:

2ND & 3RD STREET IMPROVEMENTS

CITY OF VENETA
88184 8TH STREET
VENETA, OREGON

revisions:

date:	JUNE 24, 2016
drawn by:	MJD/ARS
designer:	MLB
project no:	15-006a

DETAILS

sheet:

C6

Z:\2015\15-006a 2nd & 3rd Street Veneta\Drawings\15-006A 2nd&3rd Street DETAILS.dwg 6/23/2016 2:15 PM MARISSA

copyright © 2015 Branch Engineering, Inc.

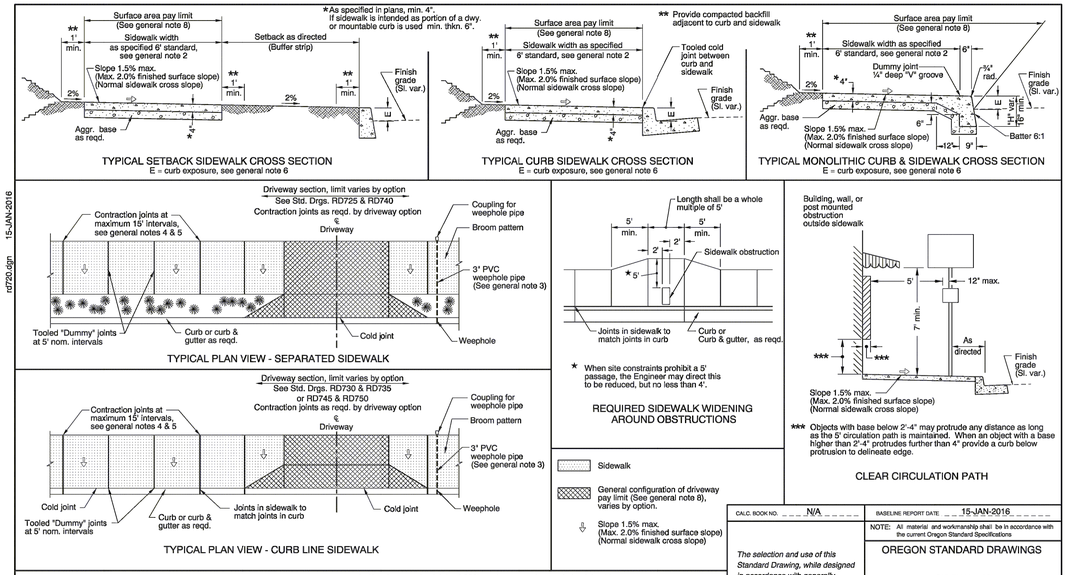

GENERAL NOTES FOR ALL DETAILS:

1. Include additional paved or unpaved 2' clearance to vertical faces higher than 5' such as retaining walls, sound walls, fences and buildings.
2. Curb type and sidewalk width as shown on plans or as directed. On sidewalks 8' and wider, provide a longitudinal joint at the midpoint.
3. Install 3" pvc weephole pipes in sidewalks where shown on plans, and allowed by jurisdiction. Place contraction joint over top of pipe.
4. Const. expansion joints at 200' maximum spacing, and at points of tangency, and at ends of each driveway. For monolithic curb & sidewalk, const. expansion joints at 45' maximum spacing.
5. Const. contraction joints at 15' maximum spacing, and at ends of each driveway and ramp.
6. For curb details, see Std. Drgs. RD700 & RD701.
7. Sidewalk details are based on United States Access Board Standards.
8. For driveway details not shown, see Std. Drgs. RD725, RD730, RD735, RD740, RD745 & RD750.
9. See project plans for details not shown.

CALC. BOOK NO. N/A

BASELINE REPORT DATE 15-JAN-2016

NOTE: All material and workmanship shall be in accordance with the current Oregon Standard Specifications

The selection and use of this Standard Drawing, while designed in accordance with generally accepted engineering principles and practices, is the sole responsibility of the user and should not be used without consulting a Registered Professional Engineer.

OREGON STANDARD DRAWINGS

SIDEWALKS

2015

DATE	REVISION DESCRIPTION
01-2015	REVISED DETAILS & ADDED NOTES
07-2015	REVISED NOTES
01-2016	REVISED NOTES

Effective Date: June 1, 2016 - November 30, 2016 RD720

RD720

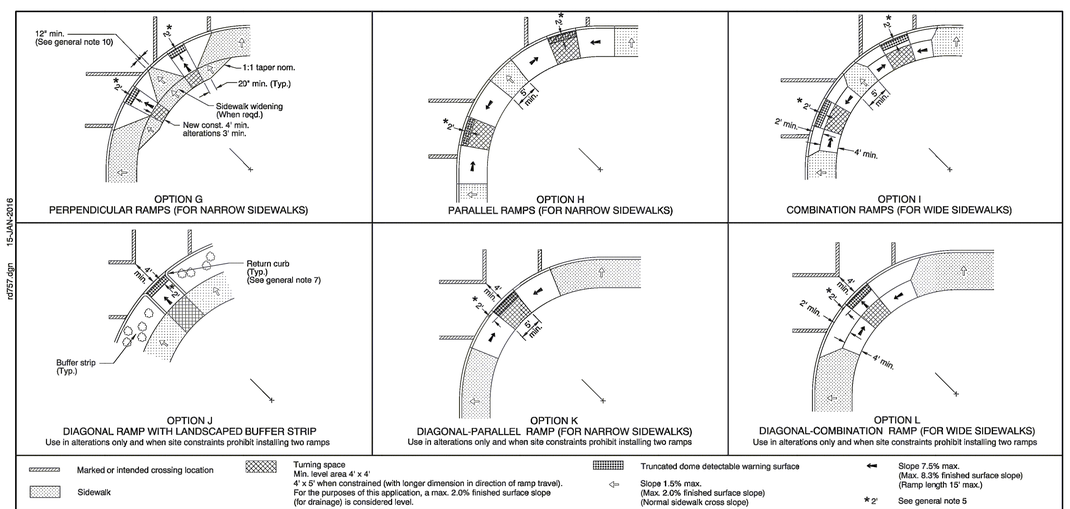

GENERAL NOTES FOR ALL DETAILS:

1. Sidewalk ramp details are based on United States Access Board Standards.
2. See Std. Drgs. RD700 & RD701 for curbs. See Std. Drg. RD720 for sidewalks. See Std. Drgs. TM503 & TM530 for crosswalk markings, widths, etc. See Std. Drg. RD755 for sidewalk ramp details.
3. Tooled joints are required at all sidewalk ramp slope break lines.
4. Sidewalk curb ramp slopes shown are relative to the true level horizon (Zero bubble).
5. Place truncated dome detectable warning surface in the lower 2' adjacent to traffic of throat of ramp only. For details not shown, see Std. Drg. RD759.
6. Side flares that are not part of the path of travel may be any slope. Check the gutter flow depth to assure that the design flood does not overtop the back of sidewalk. If overtopping occurs place an inlet at upstream side or perform other approved design mitigation.
7. Return curb may be provided in lieu of flared slope only if protected from cross travel by landscaping or fixed barrier.
8. For the purpose of this drawing, a curb ramp is considered "perpendicular" if the angle between the longitudinal axis of the ramp and a line tangent to the curb at the ramp center is 75° or greater.
9. Ramps for paths intersecting a roadway should be full width of path, excluding flares. When a ramp is used to provide bicycle access from a roadway to a sidewalk, the ramp should be 8' wide.
10. When 2 curb ramps are immediately adjacent as in Option G, the curb exposure (e) between the adjacent side flares may range between 3" and full design exposure.
11. Only use options allowed by jurisdiction.
12. See project plans for details not shown.
13. See Traffic Standard Drawings for signal pole and pedestrian pedestal details.

CALC. BOOK NO. N/A

BASELINE REPORT DATE 15-JAN-2016

NOTE: All material and workmanship shall be in accordance with the current Oregon Standard Specifications

The selection and use of this Standard Drawing, while designed in accordance with generally accepted engineering principles and practices, is the sole responsibility of the user and should not be used without consulting a Registered Professional Engineer.

OREGON STANDARD DRAWINGS

SIDEWALK RAMP PLACEMENT OPTIONS LARGE RADII

2015

DATE	REVISION DESCRIPTION
01-2015	REVISED DRAWING TITLE, DETAILS & NOTES
07-2015	REVISED NOTES
01-2016	REVISED & ADDED NOTES

Effective Date: June 1, 2016 - November 30, 2016 RD757

RD757

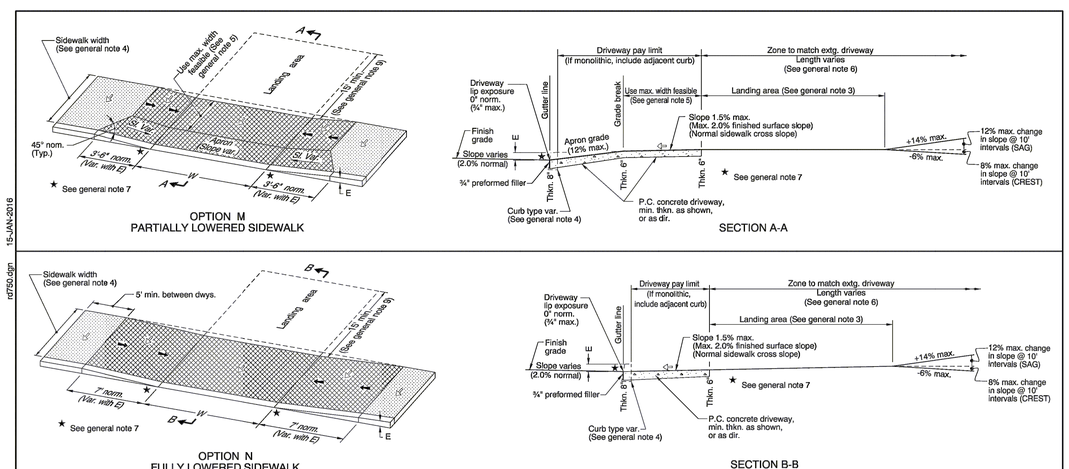

GENERAL NOTES FOR ALL DETAILS:

1. Details are based on United States Access Board Standards.
2. Only use details allowed by jurisdiction.
3. The following dimensions are as shown on plans, or as directed: driveway width, driveway slope, sidewalk width, curb exposure, driveway lip exposure, landing area length and width. See project plans for details not shown.
4. Curb, gutter, and sidewalk types varies, see plans. See Std. Drgs. RD700 & RD701 for curb details. See Std. Drg. RD720 for sidewalk details.
5. 4' unobstructed clear passage with slope 1.5% max. (Max. 2.0% finished surface slope) is required behind driveway apron. 3.5' width is acceptable where sidewalk width is less than standard 6'.
6. Where existing driveway is in good condition, and meets slope requirements, construct only as much as required for satisfactory connection with new work.
7. Check the gutter flow depth at driveway locations to assure that the design flood does not overtop the back of sidewalk at driveway. If overtopping occurs place an inlet at upstream side of driveway or perform other approved design mitigation.
8. Tooled joints are required at all driveway slope break lines.
9. 15' min. of the driveway behind the sidewalk should be surfaced to prevent tracking of gravel onto the sidewalk.
10. Monolithic curb & sidewalk shall retain thickened edge through lowered profile, to accomodate driveway use. See Std. Drg. RD720 for details.
11. Any dimensions except those of general note 5 may be amended by local agencies for their use.

Sidewalk

Driveway pay limit (If monolithic, include adjacent curb)

Slope 1.5% max. (Max. 2.0% finished surface slope) (Normal sidewalk cross slope)

Slope 7.5% max. (Max. 8.3% finished surface slope) (Ramp length 15' max.)

W Width of driveway

E Curb exposure

NOTE: This drawing is to be used by local agencies to assist them in the design of driveways on their facilities.

CALC. BOOK NO. N/A

BASELINE REPORT DATE 15-JAN-2016

NOTE: All material and workmanship shall be in accordance with the current Oregon Standard Specifications

The selection and use of this Standard Drawing, while designed in accordance with generally accepted engineering principles and practices, is the sole responsibility of the user and should not be used without consulting a Registered Professional Engineer.

OREGON STANDARD DRAWINGS

CURB LINE SIDEWALK DRIVEWAYS OR ALLEYS (OPTIONS M & N) LOCAL JURISDICTIONS

2015

DATE	REVISION DESCRIPTION
01-2015	REVISED NOTES
07-2015	REVISED NOTES
01-2016	REVISED NOTES

Effective Date: June 1, 2016 - November 30, 2016 RD750

RD750

BID SET

Branch ENGINEERING Inc.
Since 1977
civil • transportation
structural • geotechnical
SURVEYING
310 5th Street
Springfield, OR 97477
p: 541.746.0637
www.BranchEngineering.com
Springfield OR | Salem OR

REGISTERED PROFESSIONAL ENGINEER #52996 M. LANE BRANCH OREGON FEBRUARY 4, 2014 MICHAEL LANE BRANCH

Digitally signed by M. Lane Branch
Date: 2016.06.24 08:15:20 -07'00'

EXPIRES: DECEMBER 31, 2017

project title:

2ND & 3RD STREET IMPROVEMENTS

CITY OF VENETA
88184 8TH STREET
VENETA, OREGON

revisions:

date: JUNE 24, 2016

drawn by: MJD/ARS

designer: MLB

project no: 15-006a

DETAILS

sheet: C7

Z:\2015\15-006a 2nd & 3rd Street Veneta\Drawings\15-006A 2nd&3rd Street DETAILS.dwg 6/23/2016 2:15 PM MARISSA

copyright © 2015 Branch Engineering, Inc.

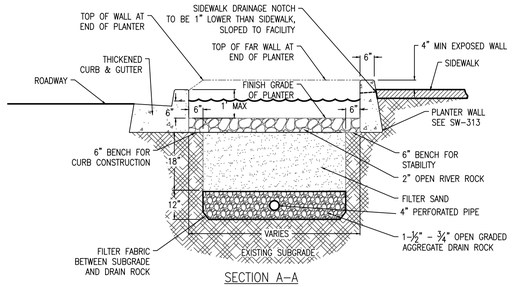

SECTION A-A
SAND FILTER

FILTER MEDIUM

Public filter bed medium shall consist of clean medium to fine sand with no organic material, or other deleterious materials and meeting the following gradation:

Sieve Size	Percent Passing
⅜ inch	100
#4	95-100
#8	80-100
#16	45-85
#30	15-60
#50	3-15
#100	<4

VEGETATION

Plantings are optional in Sand Filters. For aesthetic purposes, potted plants may be submerged in the Sand Filter.

DRAINAGE FILTRATION

Woven fabric conforming to the following physical properties:

- Minimum grab tensile strength — ASTM Method D-4632 — 110lb
- Minimum puncture strength — ASTM Method D-6241 — 220lb (ODOT)
- Elongation — ASTM Method D-4632 — 50% (ODOT)
- Maximum apparent opening size — ASTM Method D-4751 — No. 40 (ODOT)
- Maximum permittivity — ASTM Methid D-4491 — 0.5^{-1} (ODOT)

CONSTRUCTION NOTE

Scarify the native soil following the initial excavation and before installing topsoil of rock.

SAND FILTER

SCALE: N.T.S.

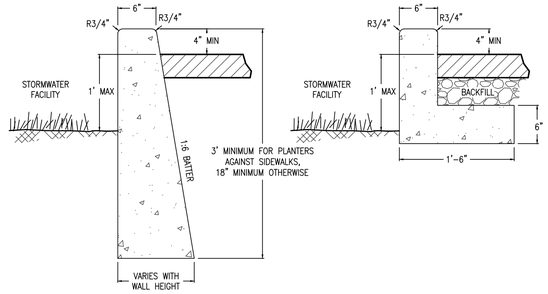

DESIGNER INFORMATION

1. Special design considerations or structural review may be required for longer planter wall spans. Steel reinforcement or additional concrete check dams may be needed for stability.
2. Specify one of the above planter wall options based on site conditions.
3. Maintain 1:6 batter for walls and 4" minimum to top of curb
4. If a liner is used with and L-shaped wall, the wall height must be increased. Three inches of concrete is required on all side of the liner attachment (see SW-360)

CONSTRUCTION NOTE

Finish all exposed concrete surfaces.

- DRAWING NOT TO SCALE -

STORMWATER MANAGEMENT MANUAL TYPICAL DETAILS

- Green Streets -
Planter Wall Details
Planters

Bureau of Environmental Services

NUMBER SW-313

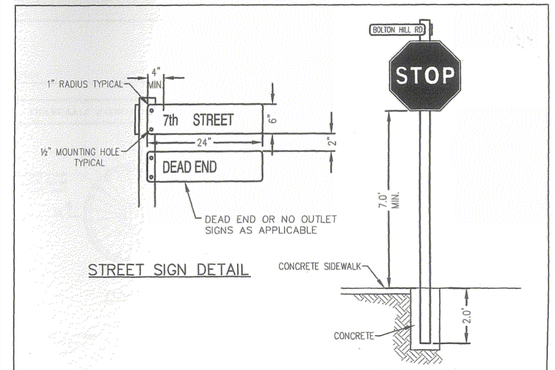

STREET SIGN DETAIL

SIGN AND POST PROFILE

SIGN NOTES

1) EXTRUDED ALUMINUM SIGN MATERIAL PER OREGON STANDARD SPECIFICATIONS FOR CONSTRUCTION
2) FACE MOUNT SIGNS WITH ½"x2" GALVANIZED LAG BOLTS AND WASHERS
3) R1-1 30"x30" STOP SIGNS PER MANUAL ON UNIFORM TRAFFIC CONTROL DEVICES
4) 6"x24" STREET NAME SIGNS WITH GREEN BACKGROUND AND 4" WHITE LETTERS ON BOTH SIDES. LONG STREET NAMES MAY REQUIRE LONGER SIGNS.
5) STREET NAME SIGNS REQUIRED AT ALL INTERSECTIONS FOR ALL STREETS.
6) STRAIGHT 4"x4" PRESSURE TREATED WOODEN POST WITH NO CRACKS
7) POSTS SHALL BE EMBEDDED IN CONCRETE 2' DEEP 18" DIAMETER
8) NO PARKING AND OTHER SIGNS USE SAME POST AND MOUNTING DETAIL

WEBER ELLIOTT ENGINEERS, P.C.
Eugene, OR

City of Veneta

CITY OF VENETA STANDARD DRAWING

TYPICAL STOP/STREET SIGN

NTS | NOVEMBER 2007 | V202

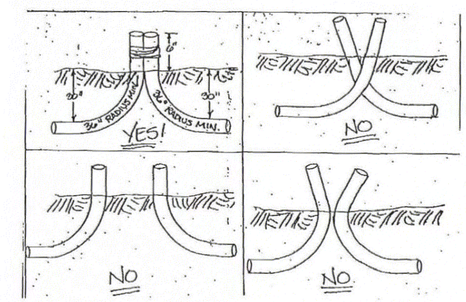

CONDUIT SWEEP DETAIL

SCALE: N.T.S.

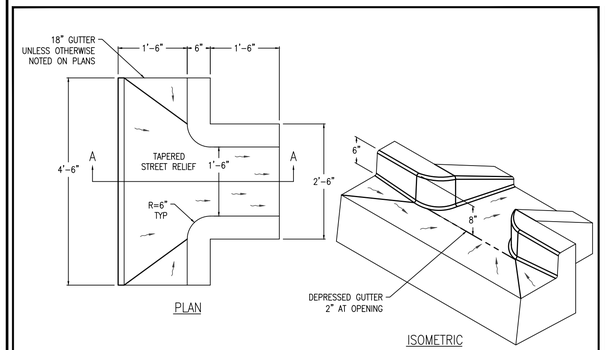

PLAN

ISOMETRIC

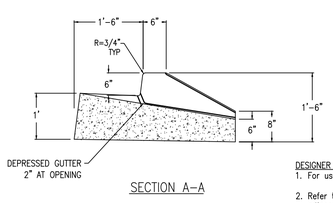

SECTION A-A

DESIGNER INFORMATION

1. For use with stormwater facilities with side slopes.
2. Refer to Standard Drawing P-540. Match gutter pan of adjacent curb and gutter.
3. Metal Inlet assembly, SW-332, required on high traffic streets.

- DRAWING NOT TO SCALE -

STORMWATER MANAGEMENT MANUAL TYPICAL DETAILS

- Green Streets -
Concrete Inlet with Wingwalls
Curb Inlets

Bureau of Environmental Services

NUMBER SW-330

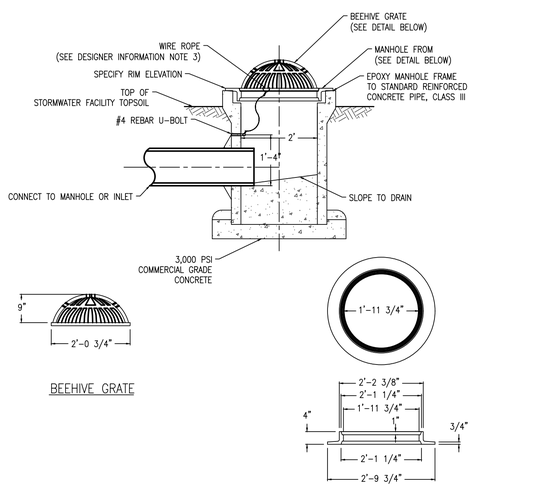

BEEHIVE GRATE

24"x4" REVERSIBLE MANHOLE FRAME

DESIGNER INFORMATION

1. If connecting to a combination sewer main install a flapper valve or approved equal to prevent odor emissions.
2. Size inlet based on calculated flows & manufacturers recommendations.
3. Wire rope between 1/8"-3/16" diameter, stainless steel, 7 strands of 19 wires.

CONSTRUCTION NOTES

1. Secure grate in place with 54" of wire rope. Loop ends of wire rope around U-bolt and grate. Crimp each end of wire rope with 3" overlap.
2. Drill 2" deep holes into pipe and epoxy #4 rebar U-bolt (2"x 4") in holes.
3. Grate to be cast iron, ASTM A48 CL30.

- DRAWING NOT TO SCALE -

STORMWATER MANAGEMENT MANUAL TYPICAL DETAILS

- Green Streets -
Beehive Inlet Grate
Overflow Inlets

Bureau of Environmental Services

NUMBER SW-350

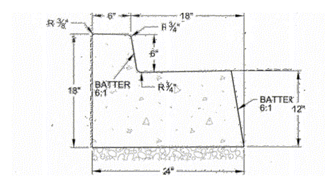

18" THICKENED CURB & GUTTER

SCALE: N.T.S.

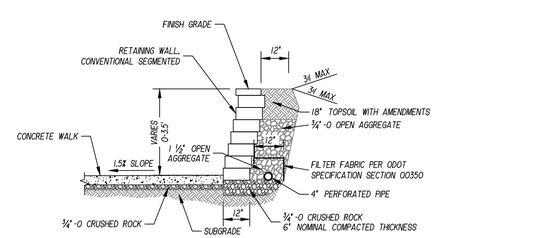

NOTES:
ANCHOR DIAMOND (STRAIGHT FACE STYLE)
DIMENSIONS = 6" x 15 7/8" x 12"
COLOR = GRAY
ANCHOR DIAMOND CAP
DIMENSIONS = 3" x 17 1/4" x 10"
COLOR = GRAY

RETAINING WALL, CONVENTIONAL SEGMENTAL

SCALE: N.T.S.

BID SET

Branch ENGINEERING Inc
Since 1977
civil • transportation
structural • geotechnical
SURVEYING
310 5th Street
Springfield, OR 97477
p: 541.746.0637
www.BranchEngineering.com
Springfield OR | Salem OR

REGISTERED PROFESSIONAL ENGINEER #52996 M. Lane Branch OREGON FEBRUARY 4, 2014 MICHAEL LANE BRANCH

Digitally signed by M. Lane Branch
Date: 2016.06.24 08:16:55 -07'00'

EXPIRES: DECEMBER 31, 2017

project title:

2ND & 3RD STREET IMPROVEMENTS

CITY OF VENETA
88184 8TH STREET
VENETA, OREGON

revisions:

date:	JUNE 24, 2016
drawn by:	MJD/ARS
designer:	MLB
project no:	15-006a

DETAILS

sheet: C8

Z:\2015\15-006a 2nd & 3rd Street Veneta\Drawings\15-006A 2nd&3rd Street DETAILS.dwg 6/23/2016 2:15 PM MARISSA

copyright © 2015 Branch Engineering, Inc.

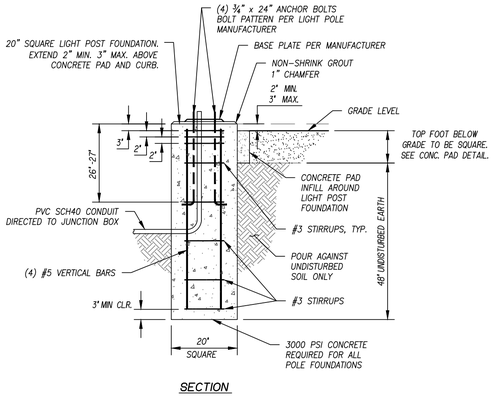

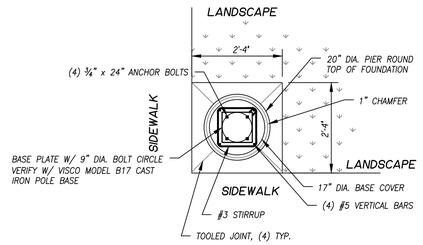

LIGHT POLE FOUNDATION

SCALE: N.T.S.

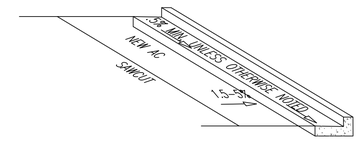

NOTES:

1. MAINTAIN .5% MIN SLOPE IN CURB FL.
2. ADJUST AC CUT LINE TO MAINTAIN ADEQUATE CURB SLOPE.
2. CONTRACTOR TO VERIFY GRADES PRIOR TO INSTALLATION OF CURB AND GUTTER.

AC AND CURB SLOPE SECTION

NOT TO SCALE

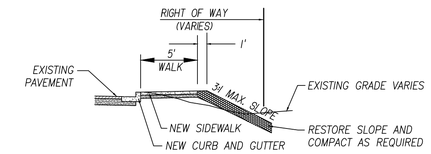

SIDEWALK NOTES:

1. LONGITUDINAL SLOPES PER ADA REQUIREMENTS.
2. MINIMUM 4' TRAVEL CLEARANCE WHERE OBSTRUCTIONS EXIST.

CURBSIDE SIDEWALK SECTION

NOT TO SCALE

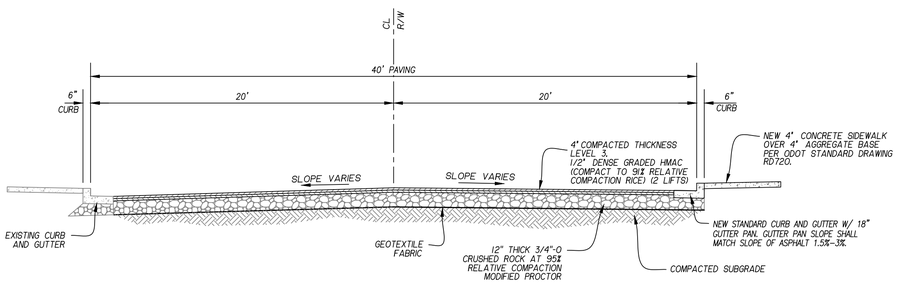

2nd STREET TYPICAL SECTION A-A

SCALE: 1" =5'

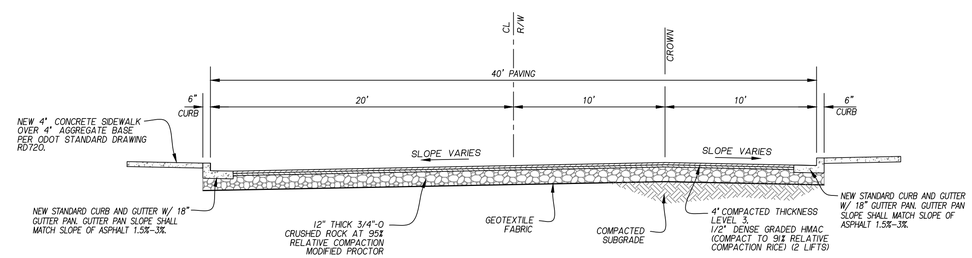

3rd STREET TYPICAL SECTION A-A

SCALE: 1" =5'

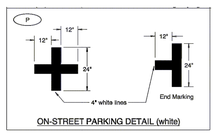

TM503 PAVEMENT MARKINGS

NOT TO SCALE

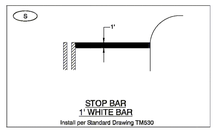

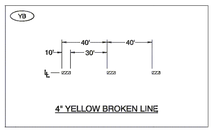

TM500 PAVEMENT MARKINGS

NOT TO SCALE

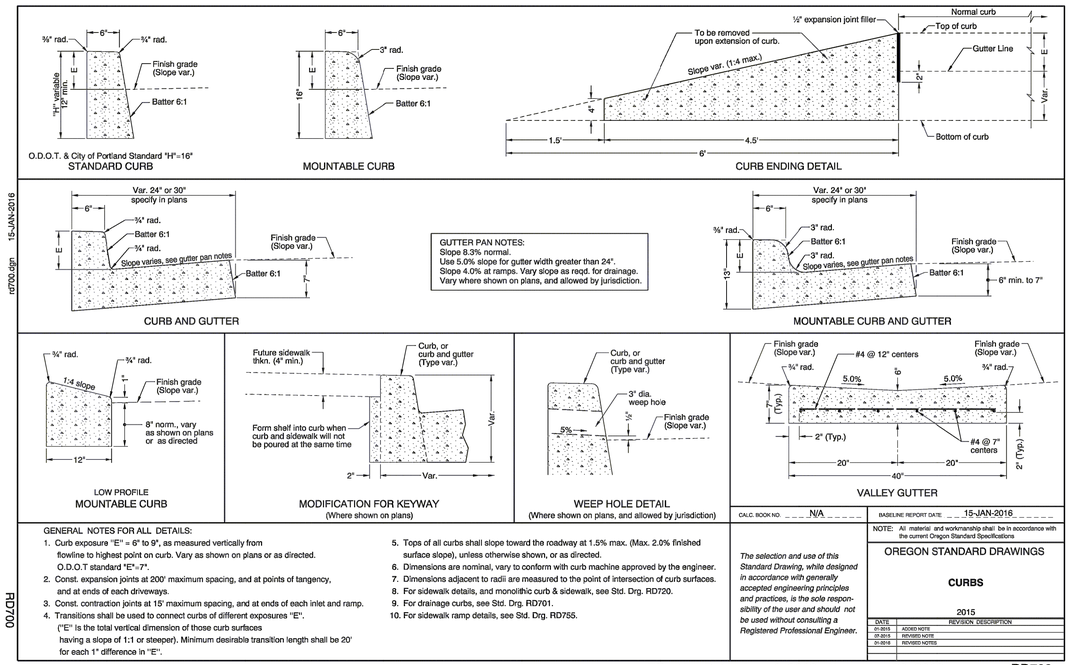

GENERAL NOTES FOR ALL DETAILS:

1. Curb exposure "E" = 6" to 9", as measured vertically from flowline to highest point on curb. Vary as shown on plans or as directed. O.D.O.T standard "E"=7".
2. Const. expansion joints at 200' maximum spacing, and at points of tangency, and at ends of each driveways.
3. Const. contraction joints at 15' maximum spacing, and at ends of each inlet and ramp.
4. Transitions shall be used to connect curbs of different exposures "E". ("E" Is the total vertical dimension of those curb surfaces having a slope of 1:1 or steeper). Minimum desirable transition length shall be 20' for each 1" difference in "E".
5. Tops of all curbs shall slope toward the roadway at 1.5% max. (Max. 2.0% finished surface slope), unless otherwise shown, or as directed.
6. Dimensions are nominal, vary to conform with curb machine approved by the engineer.
7. Dimensions adjacent to radii are measured to the point of intersection of curb surfaces.
8. For sidewalk details, and monolithic curb & sidewalk, see Std. Drg. RD720.
9. For drainage curbs, see Std. Drg. RD701.
10. For sidewalk ramp details, see Std. Drg. RD755.

CALC. BOOK NO. N/A

BASELINE REPORT DATE 15-JAN-2016

The selection and use of this Standard Drawing, while designed in accordance with generally accepted engineering principles and practices, is the sole responsibility of the user and should not be used without consulting a Registered Professional Engineer.

NOTE: All material and workmanship shall be in accordance with the current Oregon Standard Specifications

OREGON STANDARD DRAWINGS

CURBS

2015

DATE	REVISION DESCRIPTION
01-2015	ADDED NOTE
05-2015	REVISED NOTE
01-2016	REVISED NOTES

Effective Date: June 1, 2016 - November 30, 2016 RD700

rd700.dgn 15-JAN-2016

RD700

Branch ENGINEERING Inc.
Since 1977
civil • transportation
structural • geotechnical
SURVEYING
310 5th Street
Springfield, OR 97477
p: 541.746.0637
www.BranchEngineering.com
Springfield OR | Salem OR

REGISTERED PROFESSIONAL ENGINEER #52996 M. Lane Branch OREGON FEBRUARY 4, 2014 MICHAEL LANE BRANCH

Digitally signed by M. Lane Branch
Date: 2016.06.24 08:18:20 -07'00'

EXPIRES: DECEMBER 31, 2017

project title:

2ND & 3RD STREET IMPROVEMENTS

CITY OF VENETA
88184 8TH STREET
VENETA, OREGON

revisions:

date:	JUNE 24, 2016
drawn by:	MJD/ARS
designer:	MLB
project no:	15-006a

DETAILS

BID SET

sheet: C9

copyright © 2015 Branch Engineering, Inc.

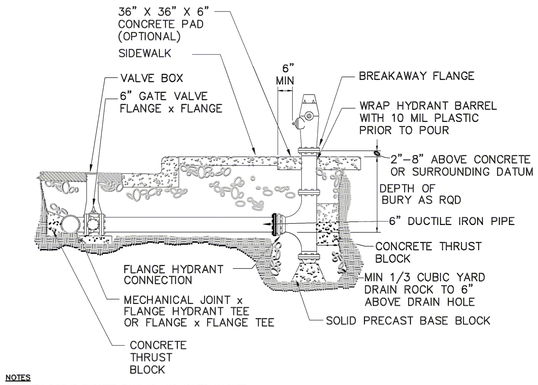

NOTES

1. WHEN PIPE IS SHORTER THAN 18", NO JOINTS ALLOWED.
2. THERE SHALL BE A MINIMUM OF 18" HORIZONTAL CLEARANCE AROUND HYDRANT.
3. WHEN PLACED ADJACENT TO CURB, HYDRANT PORT SHALL BE 24" FROM FACE OF CURB.
4. CONCRETE THRUST BLOCKS SHALL BE CONSTRUCTED AS PER THRUST BLOCK STANDARD DRAWING. DO NOT BLOCK DRAIN HOLES.
5. EXTENSIONS REQUIRED FOR HYDRANT SYSTEMS SHALL BE INSTALLED TO THE MANUFACTURER'S SPECIFICATIONS.
6. FIRE HYDRANTS SHALL BE PLACED TO PROVIDE A MINIMUM OF 5' CLEARANCE FROM DRIVEWAYS, POLES, AND OTHER OBSTRUCTIONS.
7. HYDRANT PUMPER PORT SHALL FACE DIRECTION OF ACCESS.

SYSTEMS WEST ENGINEERS, INC.
1600 Valley River Drive
Suite 310
Eugene, Oregon 97401
Phone (541) 342-7210
Fax (541) 342-7220

HYDRANT INSTALLATION

DES | DWN | CHK
DATE
PROJECT

SHT. 14 OF ___

14

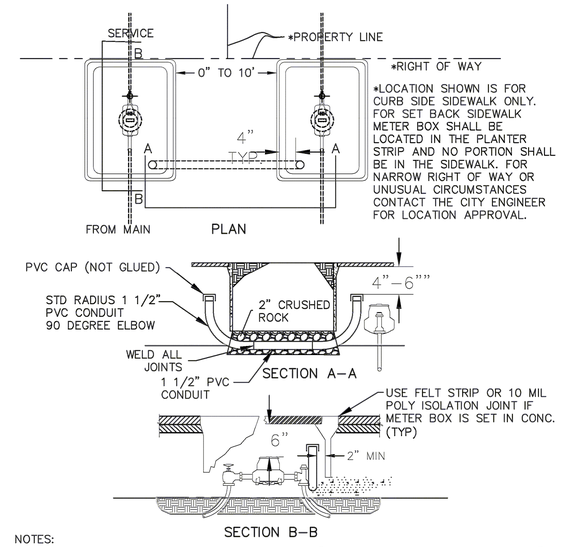

NOTES:

1. METER BOX MID-STATES MSBCF 1324-12 FOR 1" SERVICE, MSBCF 1730-18XL FOR 2" SERVICE. D.I. COVERS TO HAVE FLIP LID. AUTOMATIC METER READER (AMR) HOLE REQUIRED IN 1 OF 2 SIDE BY SIDE AND SINGLE METER COVER.
2. CITY PROVIDES METER WITH PAID METER INSTALLATION APPLICATION.
3. TRAFFIC RATED METER BOX AND COVER REQUIRED IF SET IN DRIVEWAY. CONTRACTOR TO PROVIDE SUBMITTAL PRIOR TO INSTALLATION.
4. COORDINATE WITH CITY ON PVC CONDUIT FOR METER BANKS WITH MORE THAN 2 METERS.

WEBER ELLIOTT ENGINEERS, P.C.
Eugene, OR

City of Veneta

CITY OF VENETA STANDARD DRAWING

TYPICAL WATER METER CONNECTION

SCALE: NTS | REVISED 10/07

V408

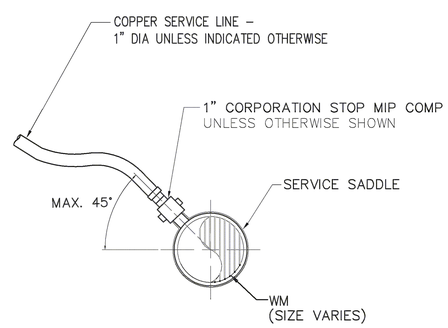

NOTE DUCTILE IRON MAY HAVE A DIRECT THREADED TAP.

WATER SERVICE CONNECTION (TYP)
SCALE: NTS

SYSTEMS WEST ENGINEERS, INC.
1600 Valley River Drive
Suite 310
Eugene, Oregon 97401
Phone (541) 342-7210
Fax (541) 342-7220

CITY OF VENETA STANDARD DRAWING

TYPICAL WATER SERVICE CONNECTION

SCALE NTS
DATE 5-18-00

V407

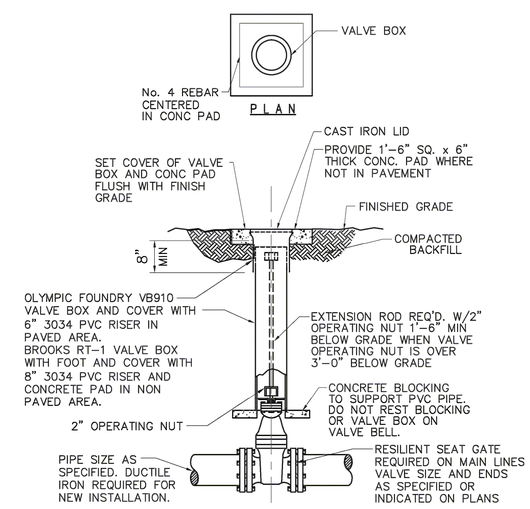

TYPICAL VALVE BOX DETAIL

WEBER ELLIOTT ENGINEERS, P.C.
Eugene, OR

City of Veneta

CITY OF VENETA STANDARD DRAWING

TYPICAL WATER VALVE AND BOX

SCALE: NTS | NOVEMBER 2007

V403

BID SET

Branch ENGINEERING Inc
Since 1977
civil • transportation
structural • geotechnical
SURVEYING
310 5th Street
Springfield, OR 97477
p: 541.746.0637
www.BranchEngineering.com
Springfield OR | Salem OR

REGISTERED PROFESSIONAL ENGINEER #52996 M. Lane Branch OREGON FEBRUARY 4, 2014 MICHAEL LANE BRANCH

Digitally signed by M. Lane Branch
Date: 2016.06.24 09:19:49 -07'00'

EXPIRES: DECEMBER 31, 2017

project title:

2ND & 3RD STREET IMPROVEMENTS

3RD STREET WATERLINE
CITY OF VENETA
VENETA, OREGON

revisions:

date:	JUNE 24, 2016
drawn by:	MD
designer:	MLB
project no:	16-006b

DETAILS

sheet: C10

Z:\2016\16-006b 3rd Street Water Line\Drawings\16-006 3rd Street Water.dwg 6/23/2016 2:34 PM MARISSA

copyright © 2016 Branch Engineering, Inc.

LIGHTING CONSTRUCTION NOTES

1. LOCATIONS OF JUNCTION BOXES, CONDUIT, AND POLES ARE APPROXIMATE. ACTUAL LOCATIONS SHALL BE AS DETERMINED IN THE FIELD BY THE ENGINEER.
2. ALL WORK SHALL BE PERFORMED BY AN APPROVED QUALIFIED ELECTRICAL CONTRACTOR.
3. CONTRACTOR SHALL NOT PERFORM ANY WORK WITHOUT INSPECTIONS. CONTACT ENGINEER 48 HOURS PRIOR TO STARTING WORK TO SCHEDULE INSPECTIONS.

(20) INSTALL PARALLEL PARKING STRIPING PER ODOT DETAIL TM503, SHEET C9.

(21) FURNISH AND INSTALL NEW STOP SIGN AND POST PER CITY OF VENETA STANDARD DRAWING NO. V202, SHEET C8.

(22) INSTALL 4" YELLOW BROKEN LINE (YB) PER ODOT STANDARD DETAIL TM500, SHEET C9.

(23) INSTALL 1' WHITE STOP BAR (S) PER ODOT STANDARD DETAIL TM503, SHEET C9.

(JB/1) FURNISH AND INSTALL TYPE 1 JUNCTION BOX (MARKED "LIGHTING") WITH CONCRETE APRON. CONFORM TO ODOT STANDARD DRAWING TM472.

(S/1") FURNISH AND INSTALL (S") SIZE RIGID ELECTRICAL CONDUIT. CONDUIT SHALL BE BURIED 30" MINIMUM FROM FINISHED GRADE. PROVIDE PULL STRING FOR FUTURE USE AND EXTEND/TERMINATE AT FOUNDATIONS.

(FND) CONSTRUCT LIGHT POLE FOUNDATION FOR FUTURE USE. SEE DETAILS SHEET C7. STUB CONDUIT TO NEAREST JUNCTION BOX. PROVIDE SUITABLE BASE/PEDESTAL TO CONCEAL ANCHOR BOLTS AND CONDUIT SWEEPS.

(1X/1") INTERCEPT EXISTING SIZE (S") INCH CONDUIT AND EXTEND INTO NEW JUNCTION BOX. INSTALL NEW SWEEPS AND SPLICE CONDUCTOR AS NECESSARY INSIDE JUNCTION BOX.

LEGEND – EXISTING

- PROPERTY/RIGHT OF WAY LINE
- SIGN
- BOLLARD
- POWER POLE
- GUY WIRE
- JUNCTION BOX
- ELECTRIC VAULT
- WATER METER
- WATER VALVE
- CONCRETE
- BUILDING

LEGEND – PROPOSED

- CURB
- ELECTRICAL LINE
- LIGHT POLE FOUNDATION
- LIGHTING JUNCTION BOX
- RELOCATED SIGN
- CONCRETE
- PLANTER STRIP/LANDSCAPING

GRAPHIC SCALE

10 0 5 10 20

(IN FEET)

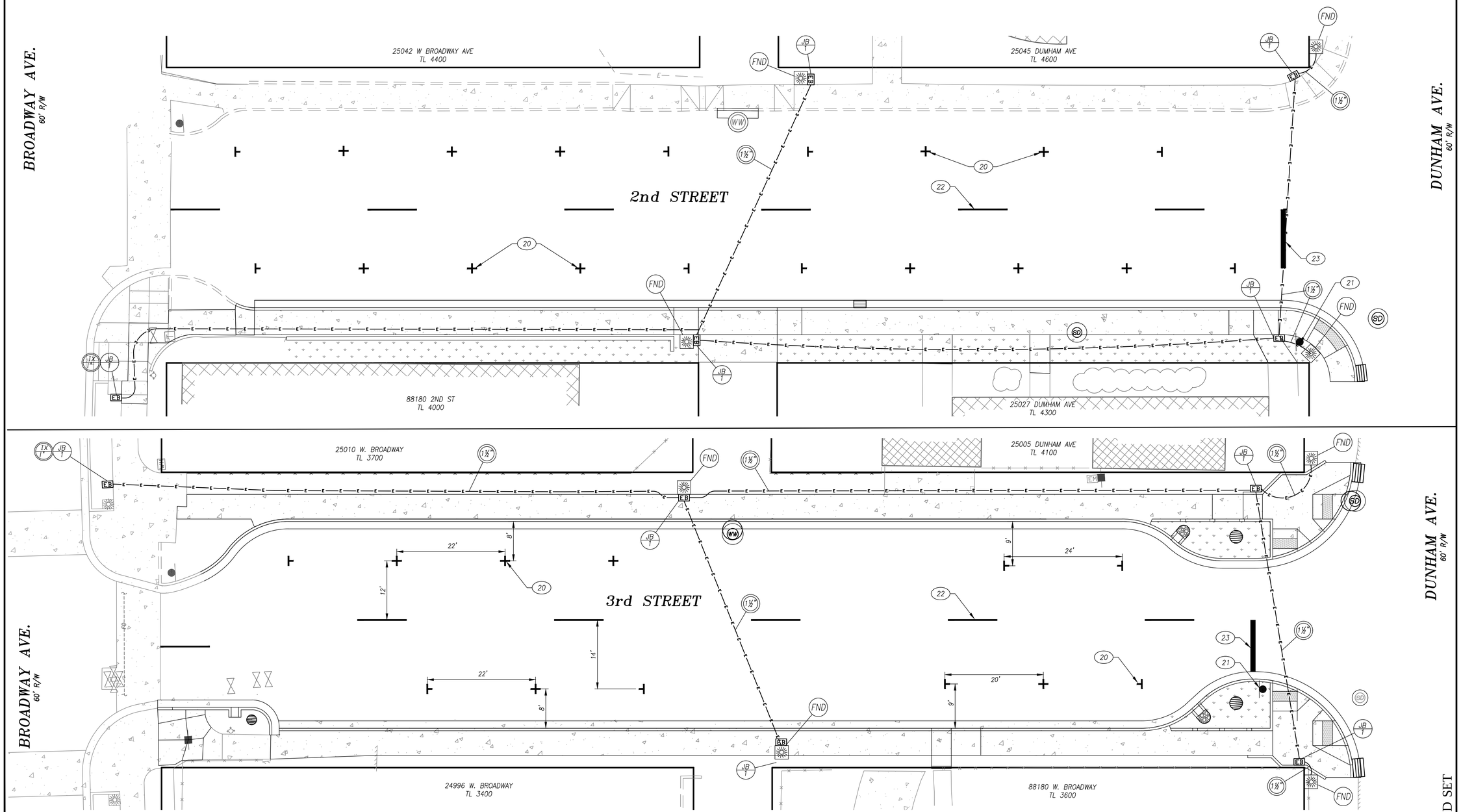

BID SET

Branch ENGINEERING Inc
Since 1977
civil • transportation
structural • geotechnical
SURVEYING
1462 COMMERCIAL ST. NE
Salem, OR 97301
p: 503.740.0637
www.BranchEngineering.com
Springfield OR | Salem OR

REGISTERED PROFESSIONAL ENGINEER #52996 OREGON FEBRUARY 4, 1986 MICHAEL LANE BRANCH

Digitally signed by M. Lane Branch
Date: 2016.06.24 03:21:10 -07'00'
M. Lane Branch

EXPIRES: DECEMBER 31, 2017

project title:

2ND & 3RD STREET IMPROVEMENTS

CITY OF VENETA
88184 8TH STREET
VENETA, OREGON

revisions:

date:	JUNE 24, 2016
drawn by:	MD
designer:	DH
project no:	15-006a

2ND & 3RD ST LIGHTING, SIGNING & STRIPING PLAN

sheet: E1

Z:\2015\15-006a 2nd & 3rd Street Veneta\Drawings\15-006a 3rd Street.dwg 6/23/2016 2:23 PM MARISSA

copyright © 2015 Branch Engineering, Inc.