VENETA oregon Inc.1962

LANE COUNTY, OREGON

AIR PIPING UPGRADES

PROJECT NO. 3101-006

April 2015

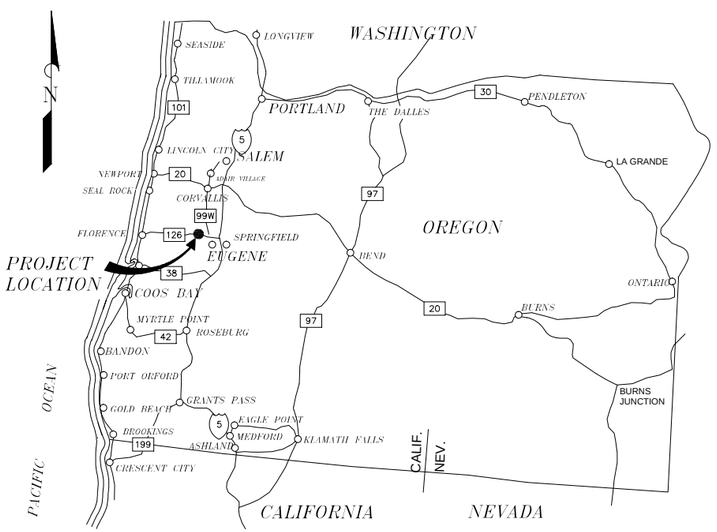

LOCATION MAP

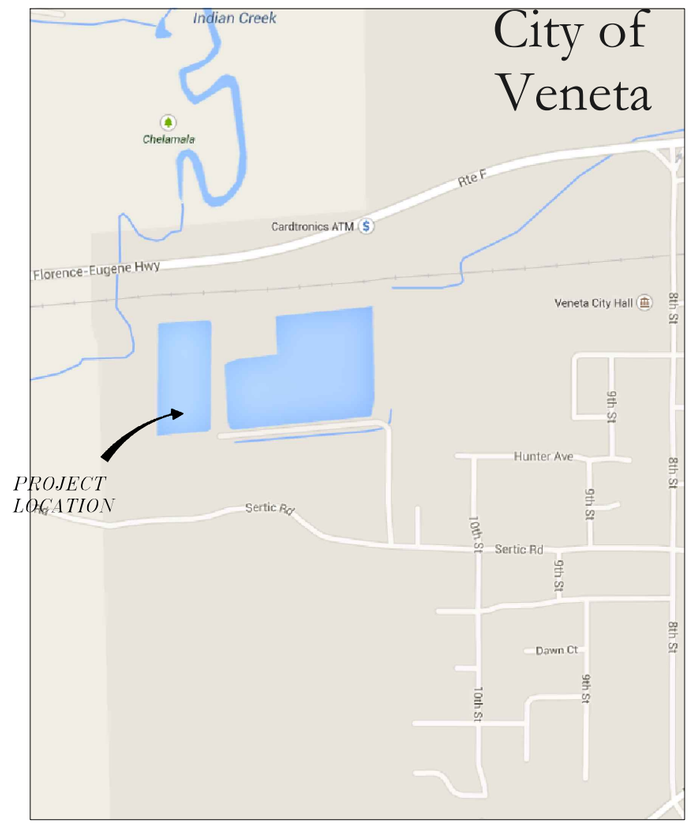

VICINITY MAP

NOT TO SCALE

Sheet List Table	
Sheet Number	Sheet Title
GENERAL	
G0	COVER
G1	LEGEND
PLAN SHEETS	
C1	OVERALL SITE PLAN - EXISTING IMPROVEMENTS
C2	OVERALL SITE PLAN - NEW IMPROVEMENTS
C3	MAIN LINE
C4	LATERALS TO AERATION BASINS
DETAIL SHEETS	
D1	PIPE TRENCH, SUPPORTS AND ACTUATED VALVE DETAILS
D2	BUILDING TRANSITION & SIDEWALK TRANSITION DETAILS
D3	TRENCH DRAIN AND TRANSITION TO GROUND DETAILS
ELECTRICAL SHEETS	
E1	ELECTRICAL LEGEND
E2	CONTROL LINE CONNECTIONS
E3	CONDUIT CONNECTIONS INSIDE CONTROL BUILDING
E4	CONDUIT CONNECTIONS

REGISTERED PROFESSIONAL ENGINEER 83524PE OREGON NOV. 10, 2009 MATTHEW D. WADLINGTON

EXPIRATION DATE: 06/30/2016

Civil West Engineering Services, Inc.
486 E Street
Coos Bay, Oregon 97420
541-266-8601
www.civilwest.com

REV.	DATE	DESCRIPTION	BY

Designed By: MDW Drawn By: JBJ Checked By: JGP

Project No: 3101-006

CITY OF VENETA
88184 8th St, Veneta, OR 97487

AIR PIPING UPGRADES

COVER

Sheet No. G0

Date April 2015

DATE:4/30/15 FILE:Z:\CW_Projects\3101 Veneta\3101-006 - Air Piping Design & Construction\Drawings\Dwg\Veneta-air piping improvements- working.dwg

GENERAL NOTES

OREGON LAW REQUIRES YOU TO FOLLOW THE RULES ADOPTED BY THE OREGON UTILITY NOTIFICATION CENTER. THOSE RULES ARE SET FORTH IN OAR 952-001-0010 THROUGH 952-001-0090 AND ORS 757.542 THROUGH ORS 757.562 AND ORS 757.993. YOU MAY OBTAIN COPIES OF THE RULES FROM THE CENTER BY CALLING (503) 246-1987.

THE CONTRACTOR SHALL CONTACT 'ONE CALL' FOR UTILITY LOCATES PRIOR TO EXCAVATION. (1-800-332-2344)

THE EXISTING UTILITY CROSSINGS OF THE PIPELINES ARE SHOWN ACCORDING TO AVAILABLE INFORMATION. THE CONTRACTOR SHALL VERIFY THE LOCATION AND ELEVATION OF ALL THE UTILITY CROSSINGS ALONG THE LENGTH OF THE PIPELINES AS SPECIFIED. NO GUARANTEE IS MADE THAT ALL OF THE EXISTING UTILITIES ARE SHOWN. THE CONTRACTOR SHALL EXERCISE CAUTION WHEN EXCAVATING AND PROTECT ALL EXISTING UTILITIES FROM DAMAGE DURING HIS OPERATIONS.

EXISTING WATER METERS BOXES AND VALVES ARE NOT SPECIFICALLY INDICATED ON THE DRAWINGS BUT DO EXIST ALONG THE PIPELINE ROUTES. CONTRACTOR SHALL LOCATE PRIOR TO THE START OF CONSTRUCTION.

THE LOCATION AND DEPTH SHOWN ON THESE DRAWINGS FOR THE EXISTING PIPELINES ARE APPROXIMATE ONLY AND BASED ON AS BUILT DRAWINGS, VALVE LOCATIONS AND OTHER INFORMATION. THERE ARE NO TRACER WIRES FOR LOCATING THE MAJORITY OF EXISTING UTILITIES AND EXISTING UTILITIES MAY BE IN CLOSE PROXIMITY TO NEW PIPELINE ROUTES.

CONTRACTOR SHALL POTHOLE AND LOCATE EXISTING UTILITIES PRIOR TO PLACEMENT OF NEW PIPE.

ALL MATERIALS AND WORKMANSHIP SHALL CONFORM TO THE PROJECT DESIGN SPECIFICATIONS AND DRAWINGS. THESE DRAWINGS SHALL BE COORDINATED AND USED IN CONJUNCTION WITH THE TECHNICAL SPECIFICATIONS AND APPROVED SUBMITTALS.

CONTRACTOR SHALL BE RESPONSIBLE FOR OBTAINING ALL NECESSARY PERMITS REQUIRED FOR CONSTRUCTION

CONTRACTOR SHALL FIELD VERIFY PIPE LENGTHS AND DIMENSIONS BASED ON EXISTING CONDITIONS

GENERAL ABBREVIATIONS

AC	PAVEMENT
BFV	BUTTERFLY VALVE
BLDG.	BUILDING
CB	CATCH BASIN
CPLG	COUPLING
CTR	CENTER
CW	CITY WATER (POTABLE)
CWN	CITY WATER (NONPOTABLE)
D	DRAIN
DI	DUCTILE IRON
DO	DISSOLVED OXYGEN
EXIST'G	EXISTING
FH	FIRE HYDRANT
FL	FLOWLINE
FLG	FLANGE
FM	FORCE MAIN
GV	GATE VALVE
HDD	HORIZONTAL DIRECTIONAL DRILLING
HDPE	HIGH DENSITY POLYETHYLENE PIPE
HPC	HYPOCHLORITE
HS	HARVESTED SLUDGE
HSG	HIGH PRESSURE SLUDGE GAS
MH	MANHOLE
MJ	MECHANICAL JOINT
NG	NATURAL GAS
NPW	NON-POTABLE WATER
OF	OVERFLOW
PED	PEDESTAL
PVC	POLY VINYL CHLORIDE PIPE
RAS	REACTIVATED SLUDGE
ROW	RIGHT OF WAY
RS	RAW SEWAGE
RW	RAW WATER
RWR	RECLAIMED WATER
SD	STORM DRAIN
SPW	SPILLWAY
SS	SANITARY SEWER
STA	STATION
SW	SIDEWALK
TD	TANK DRAIN
TRANS.	TRANSITION
V	VENT
VAC	VACUUM
VC	VENT (CHEMICAL)
WM	WATER METER
WV	WATER VALVE
WAS	WASTE ACTIVATED SLUDGE

DETAIL REFERENCING

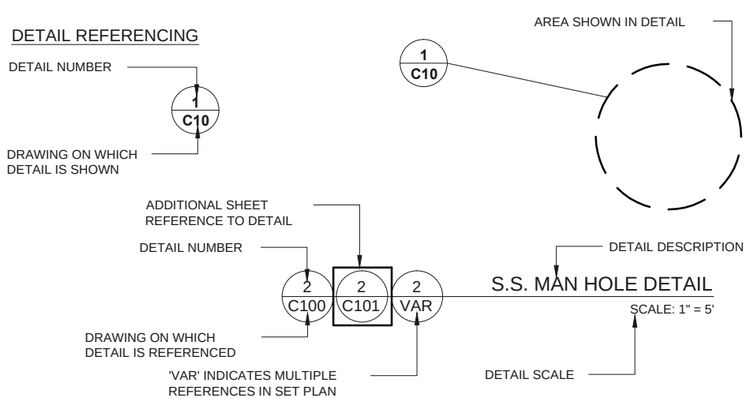

EXISTING FEATURE LEGEND

SYMBOL LEGEND

LINETYPE LEGEND

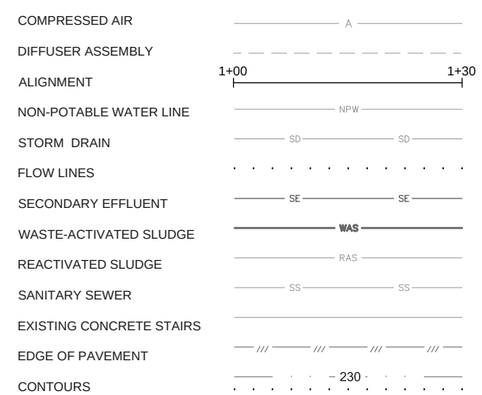

HATCH LEGEND

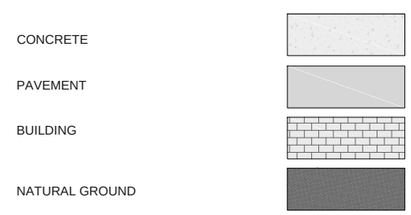

NEW FEATURE LEGEND

SYMBOL LEGEND

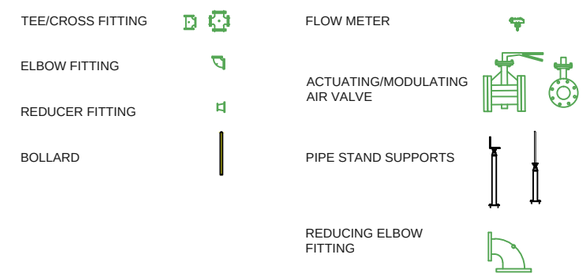

LINETYPE LEGEND

HATCH LEGEND

GRADING LEGEND

REGISTERED PROFESSIONAL ENGINEER
83524PE
OREGON
NOV 10, 2009
MATTHEW D. WADLINGTON

EXPIRATION DATE: 06/30/2016

Civil West Engineering Services, Inc.
486 E Street
Coos Bay, Oregon 97420
541-266-8601
www.civilwest.com

REV.	DATE	DESCRIPTION	BY

Designed By: MDW
Drawn By: JBJ
Checked By: JGP
Project No: ####

CITY OF VENETA
88184 8th St, Veneta, OR 97487

AIR PIPING UPGRADES

LEGEND

Sheet No. G1

Date April 2015

DATE:4/30/15 FILE:Z:\CW_Projects\3101 Veneta\3101-006 - Air Piping Design & Construction\Drawings\Dwg\Veneta-air piping improvements- working.dwg

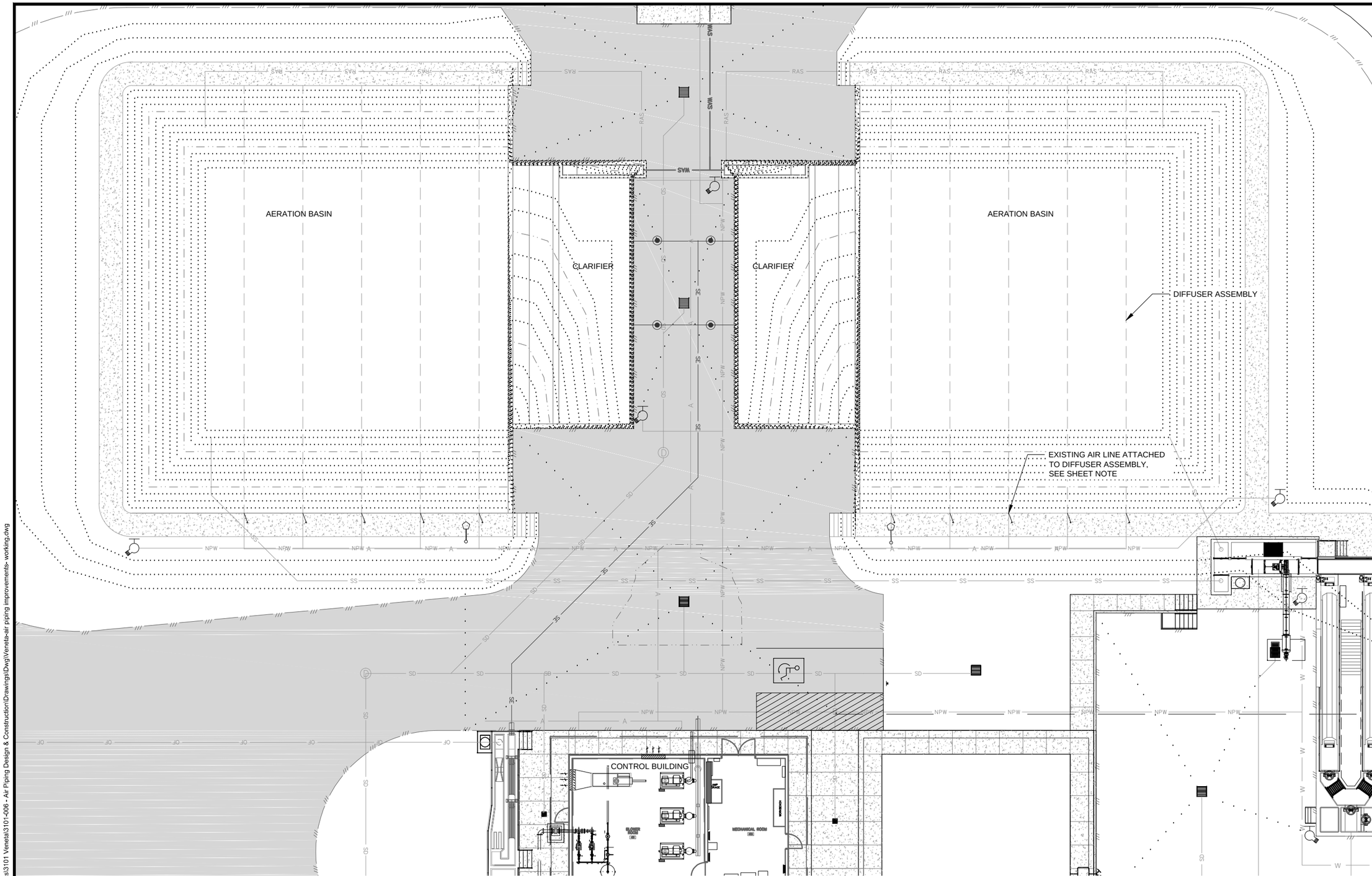

SHEET NOTES:

1. EXISTING COMPRESSED AIR DISTRIBUTION LINES TO BE DEMOLISHED AFTER INSTALLATION AND CROSS OVER TO NEW DUCTILE IRON PIPE.

A
C1

OVERALL SITE PLAN - EXISTING IMPROVEMENTS

PLAN SCALE

20 0 5 10 20

1"=20'

REGISTERED PROFESSIONAL ENGINEER
83524PE
Matt Wadlington
OREGON
NOV. 10, 2009
MATTHEW D. WADLINGTON

EXPIRATION DATE: 06/30/2016

Civil West Engineering Services, Inc.

486 E Street
Coos Bay, Oregon 97420

541-266-8601
www.civilwest.com

REV.	DATE	DESCRIPTION	BY

Designed By: MDW
Drawn By: JBJ
Checked By: JGP
Project No: 3101-006

CITY OF VENETA
88184 8th St, Veneta, OR 97487

AIR PIPING UPGRADES

OVERALL SITE PLAN - EXISTING IMPROVEMENTS

Sheet No. C1

Date April 2015

DATE:4/30/15 FILE:Z:\CW_Projects\3101 Veneta\3101-006 - Air Piping Design & Construction\Drawings\Dwg\Veneta-air piping improvements- working.dwg

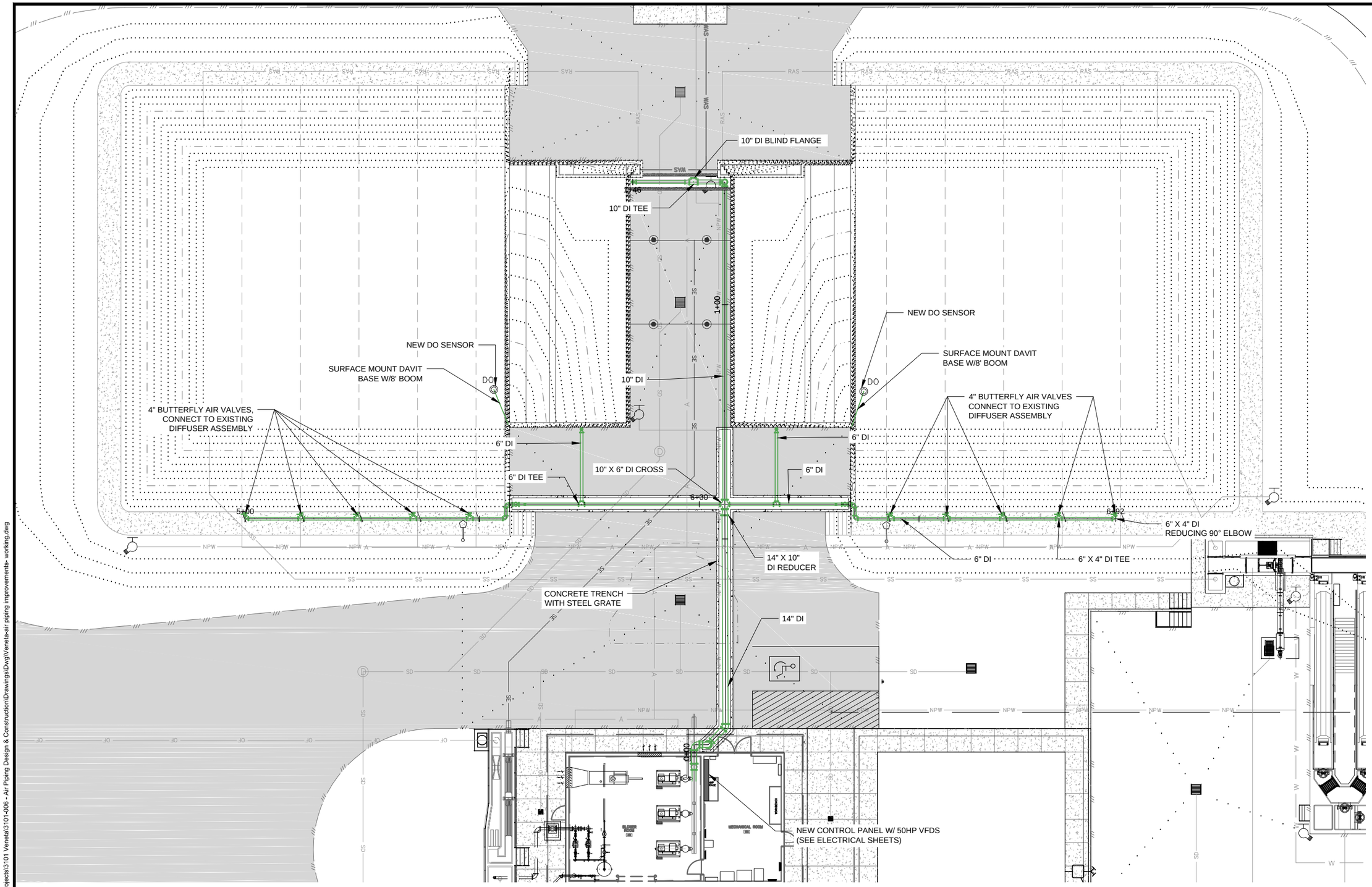

A
C2

OVERAL SITE PLAN - NEW IMPROVEMENTS

PLAN SCALE

20 0 5 10 20

1"=20'

REGISTERED PROFESSIONAL ENGINEER
83524PE
Matt Wadlington
OREGON
NOV. 10, 2009
MATTHEW D. WADLINGTON

EXPIRATION DATE: 06/30/2016

Civil West Engineering Services, Inc.
486 E Street
Coos Bay, Oregon 97420
541-266-8601
www.civilwest.com

REV.	DATE	DESCRIPTION	BY

Designed By: MDW
Drawn By: JBJ
Checked By: JGP
Project No: 3101-006

CITY OF VENETA
88184 8th St, Veneta, OR 97487

AIR PIPING UPGRADES

OVERALL SITE PLAN - NEW IMPROVEMENTS

Sheet No. C2

Date April 2015

DATE:4/30/15 FILE:Z:\CW_Projects\3101 Veneta\3101-006 - Air Piping Design & Construction\Drawings\Dwg\Veneta-air piping improvements- working.dwg

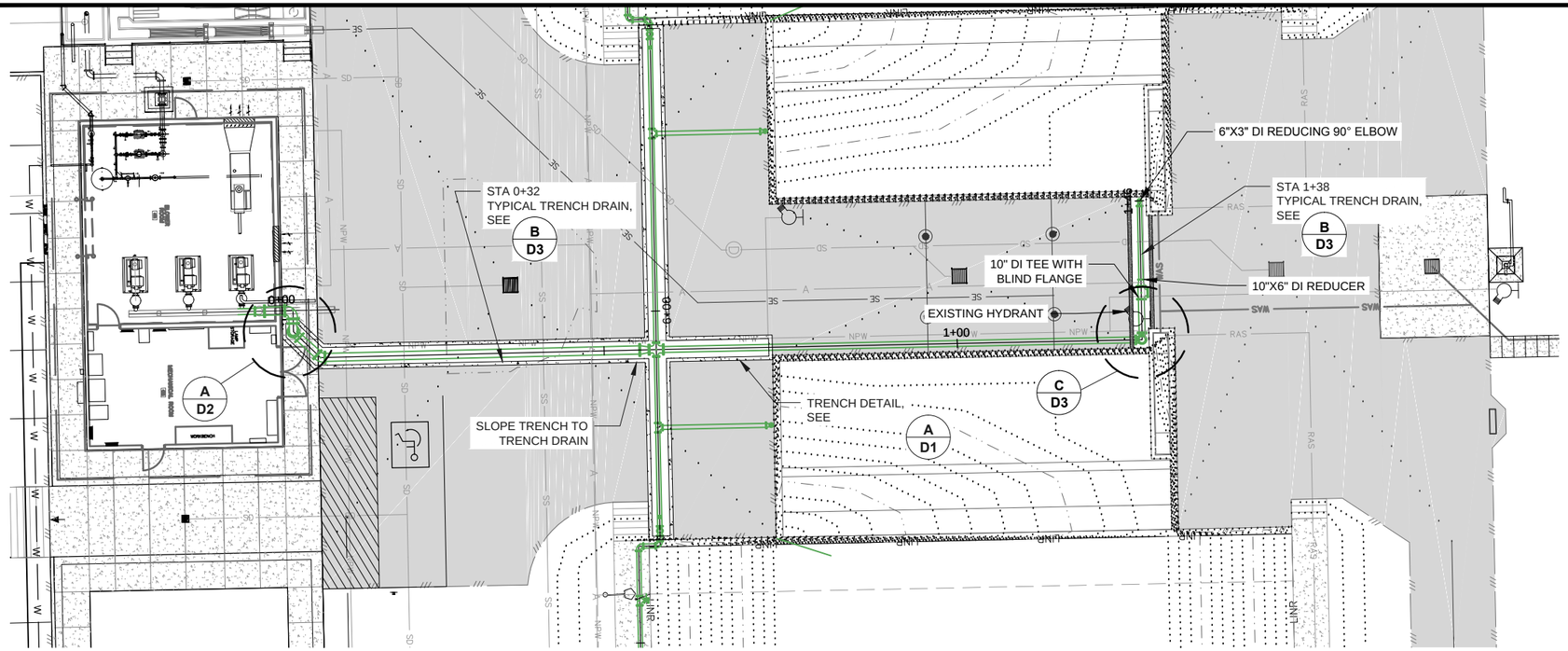

A C3 MAINLINE PLAN VIEW

PLAN SCALE

20 0 5 10 20

1"=20'

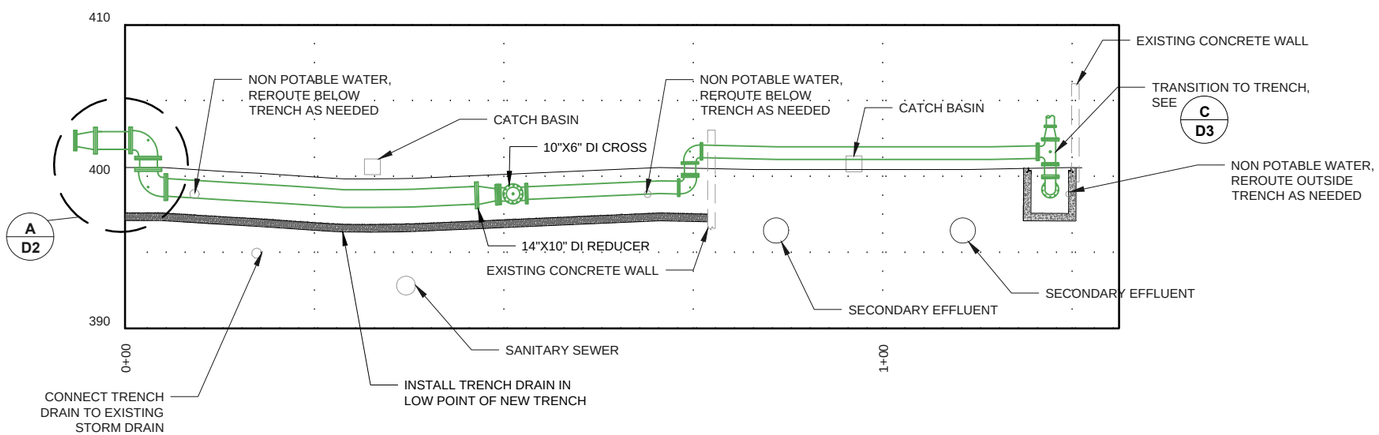

B C3 MAINLINE PROFILE VIEW

SCALE HORZ 1"=20'
VERT 1"=2'

REGISTERED PROFESSIONAL ENGINEER
83524PE
OREGON
NOV. 10, 2009
MATTHEW D. WADLINGTON

EXPIRATION DATE: 06/30/2016

Civil West Engineering Services, Inc.
486 E Street
Coos Bay, Oregon 97420
541-266-8601
www.civilwest.com

REV.	DATE	DESCRIPTION	BY

Designed By: MDW
Drawn By: JBJ
Checked By: JGP
Project No: 3101-006

CITY OF VENETA
88184 8th St, Veneta, OR 97487

AIR PIPING UPGRADES

MAIN LINE

Sheet No. C3

Date April 2015

DATE:4/30/15 FILE:Z:\CW_Projects\3101 Veneta\3101-006 - Air Piping Design & Construction\Drawings\Dwg\Veneta-air piping improvements- working.dwg

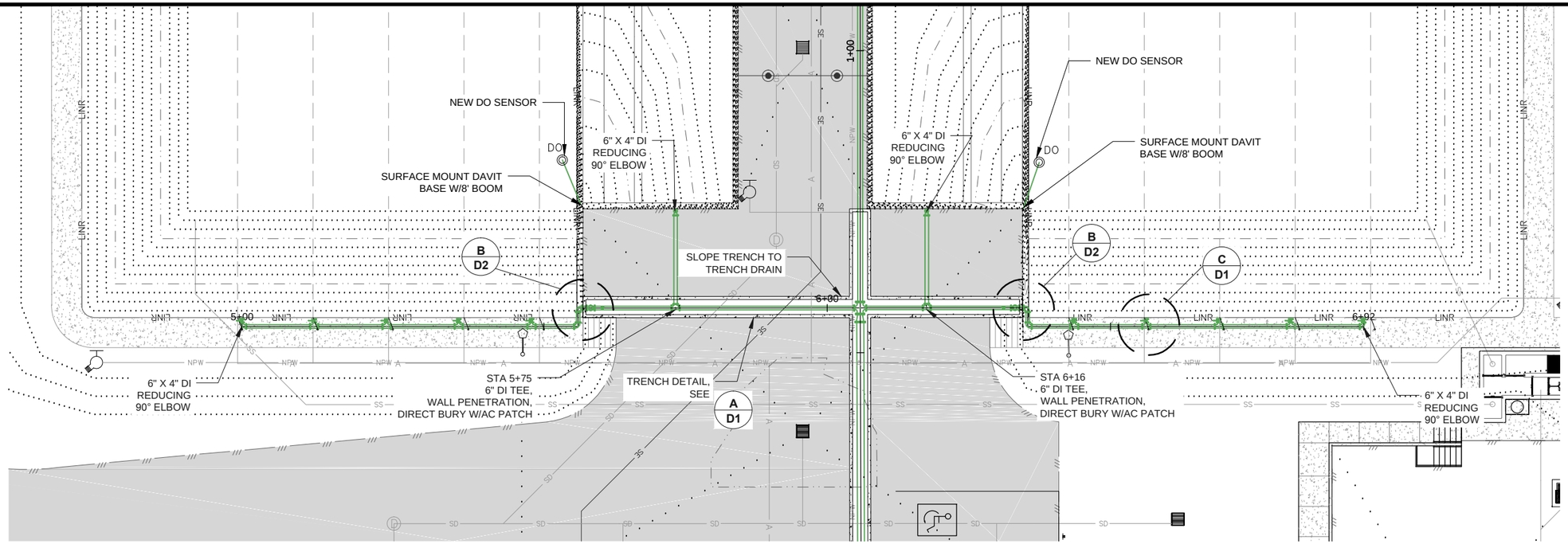

A / C4 LATERALS TO AERATION BASINS PLAN VIEW

PLAN SCALE
20 0 5 10 20
1"=20'

N

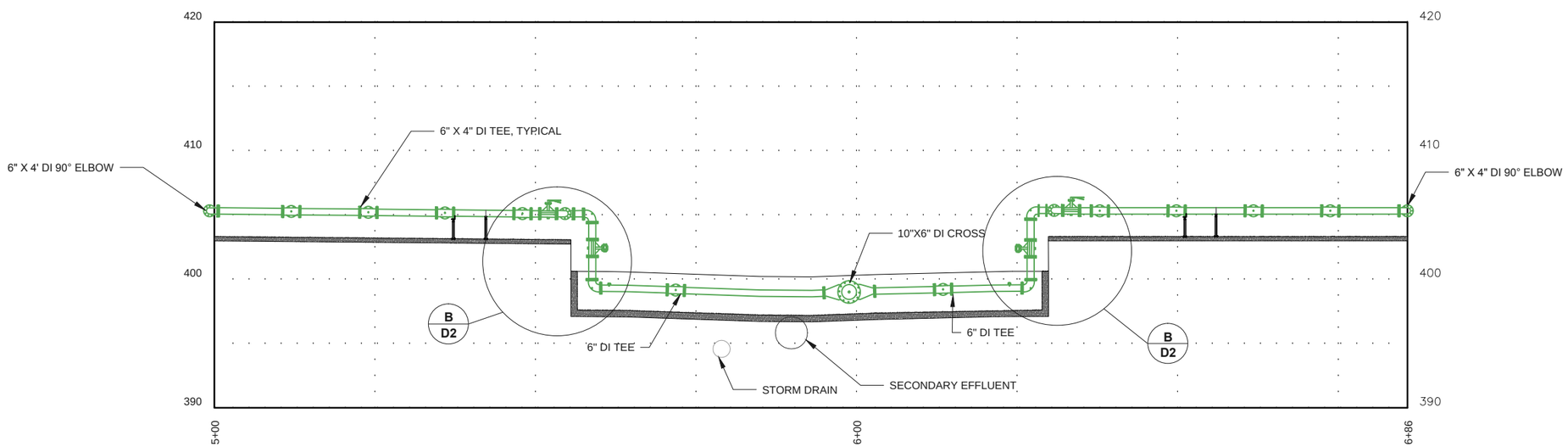

B / C4 LATERALS TO AERATION BASINS PROFILE VIEW

SCALE HORZ 1"=20'
VERT 1"=2'

REGISTERED PROFESSIONAL ENGINEER
83524PE
OREGON
NOV. 10, 2009
MATTHEW D. WADLINGTON
EXPIRATION DATE: 06/30/2016

Civil West Engineering Services, Inc.
486 E Street
Coos Bay, Oregon 97420
541-266-8601
www.civilwest.com

REV.	DATE	DESCRIPTION	BY

Designed By: MDW
Drawn By: JBJ
Checked By: JGP
Project No: ####

CITY OF VENETA
88184 8th St, Veneta, OR 97487

AIR PIPING UPGRADES

LATERALS TO AERATION BASINS

Sheet No. C4
Date April 2015

DATE:4/30/15 FILE:Z:\CW_Projects\3101 Veneta\3101-006 - Air Piping Design & Construction\Drawings\Dwg\Veneta-air piping improvements- working.dwg

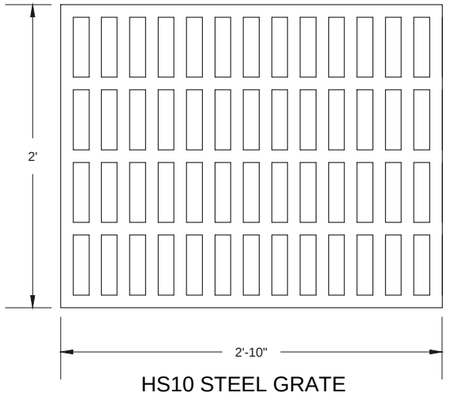

HS10 STEEL GRATE

(NOT TO SCALE)

GRATING SCHEDULE			
PIPE DIAMETER	TRENCH OUTSIDE WIDTH	MAXIMUM CLEAR SPAN*	BEARING BAR SIZE
14"	3'-6"	2'-6"	$2\frac{1}{4}$" X $\frac{3}{8}$"
10"	3'-2"	2'-2"	$2\frac{1}{4}$" X $\frac{5}{16}$"
6"	2'-9"	1'-9"	$2\frac{1}{4}$" X $\frac{1}{4}$"

* STEEL BAR GRATING PER SPECS

GRATING NOTES:

1. GRATING SHALL CONFORM TO THE METAL BAR GRATING MANUAL OF NAAMM. UNLESS OTHERWISE SPECIFIED, GRATING SHALL BE GALVANIZED STEEL.
2. UNLESS OTHERWISE SPECIFIED, PROVIDE 4 GRATING CLIPS APPROX 4" FROM THE CORNERS OF EACH PIECE. ADJACENT PIECES MAY BE ANCHORED WITH ONE CLIP AND TWO STUDS.
3. GRATING SHALL BE REMOVABLE

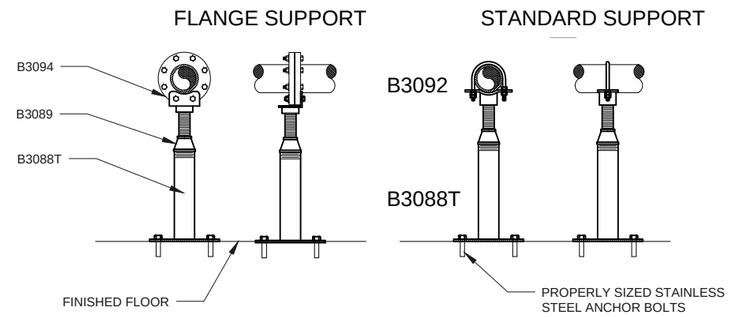

B / D1 PIPE SUPPORT DETAIL

NOT TO SCALE

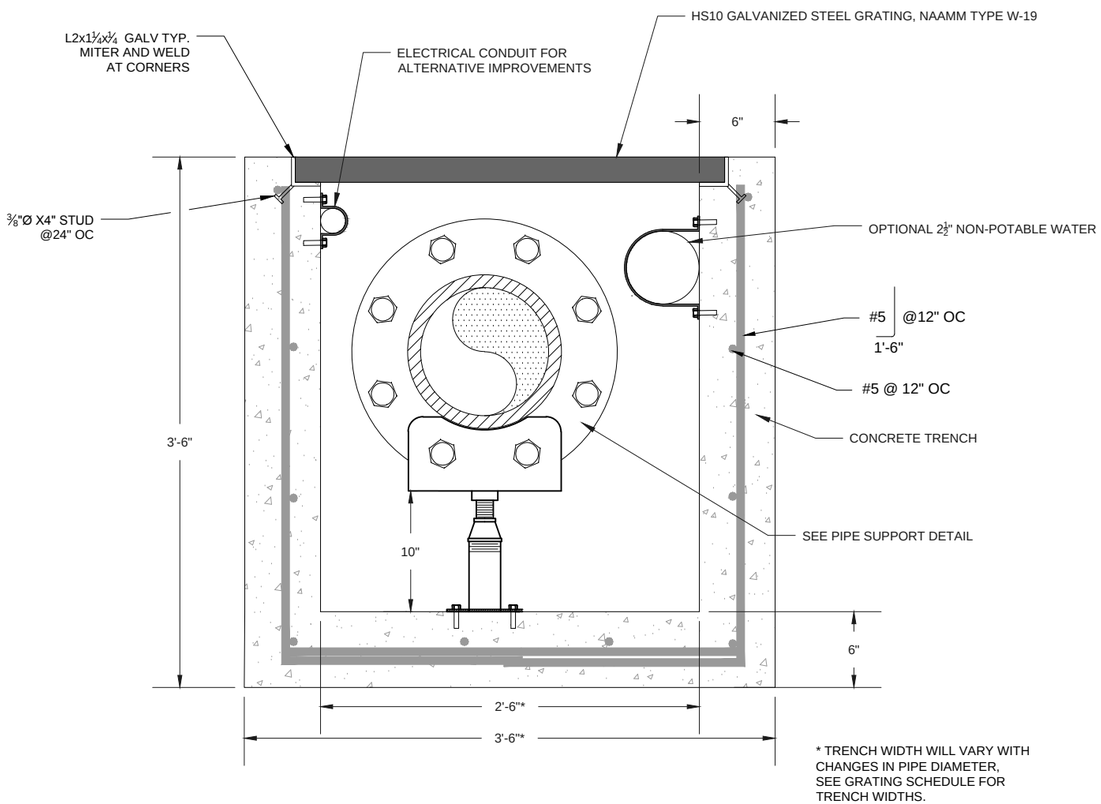

* TRENCH WIDTH WILL VARY WITH CHANGES IN PIPE DIAMETER, SEE GRATING SCHEDULE FOR TRENCH WIDTHS.

A / D1 PIPE TRENCH WITH GRATE

NOT TO SCALE

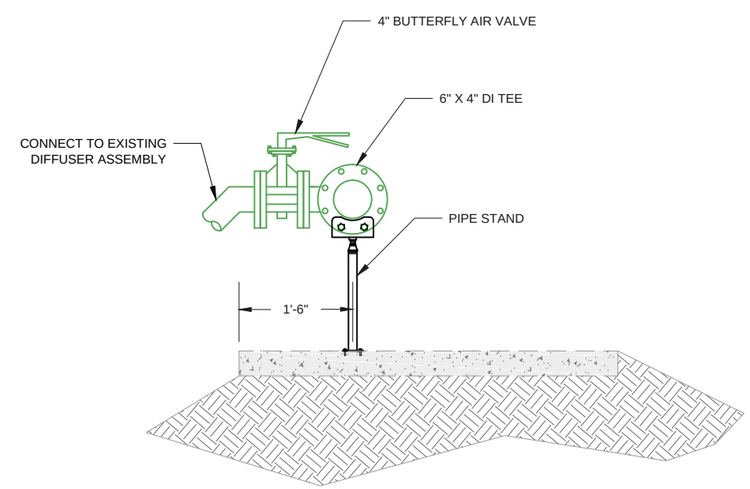

C / D1 TYPICAL 4 INCH BUTTERFLY VALVE

NOT TO SCALE

REGISTERED PROFESSIONAL ENGINEER
83524PE
OREGON
NOV. 10, 2009
MATTHEW D. WADLINGTON

EXPIRATION DATE: 06/30/2016

Civil West Engineering Services, Inc.
486 E Street
Coos Bay, Oregon 97420
541-266-8601
www.civilwest.com

REV.	DATE	DESCRIPTION	BY

Designed By: MDW Drawn By: JBJ Checked By: JGP
Project No: 3101-006

CITY OF VENETA
88184 8th St, Veneta, OR 97487

AIR PIPING UPGRADES

PIPE TRENCH, SUPPORTS AND ACTUATED VALVE DETAILS

Sheet No. D1

Date April 2015

DATE:4/30/15 FILE:Z:\CW_Projects\3101 Veneta\3101-006 - Air Piping Design & Construction\Drawings\Dwg\Veneta-air piping improvements- working.dwg

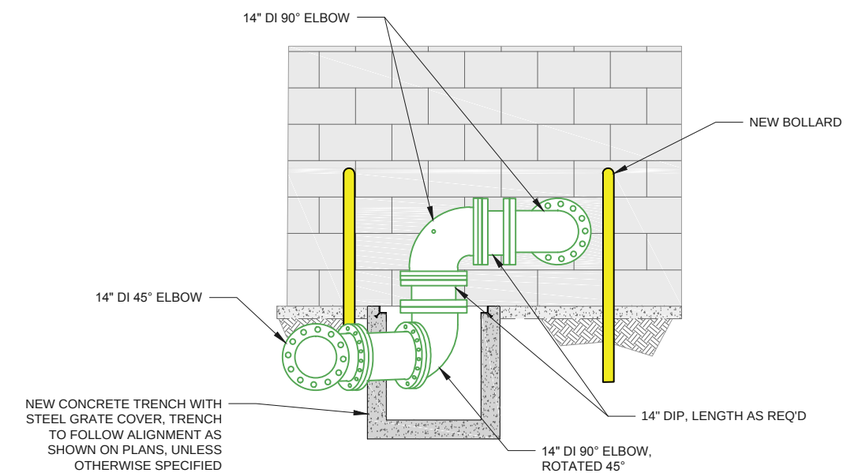

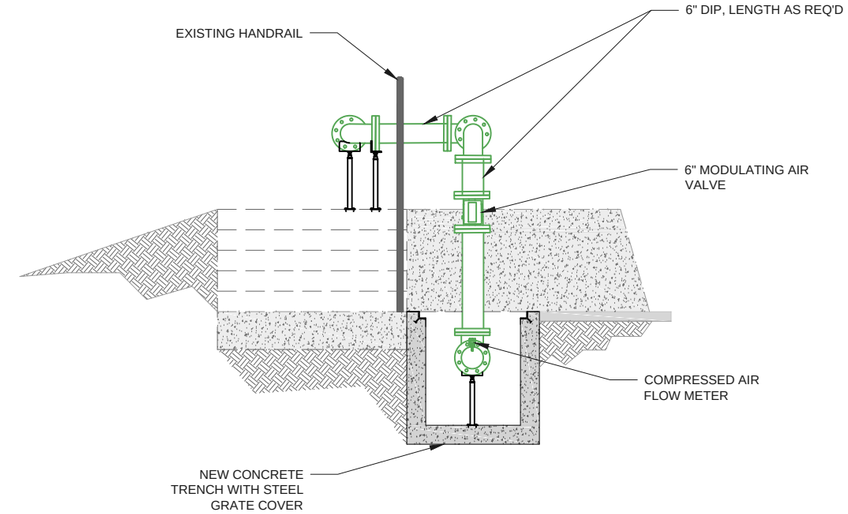

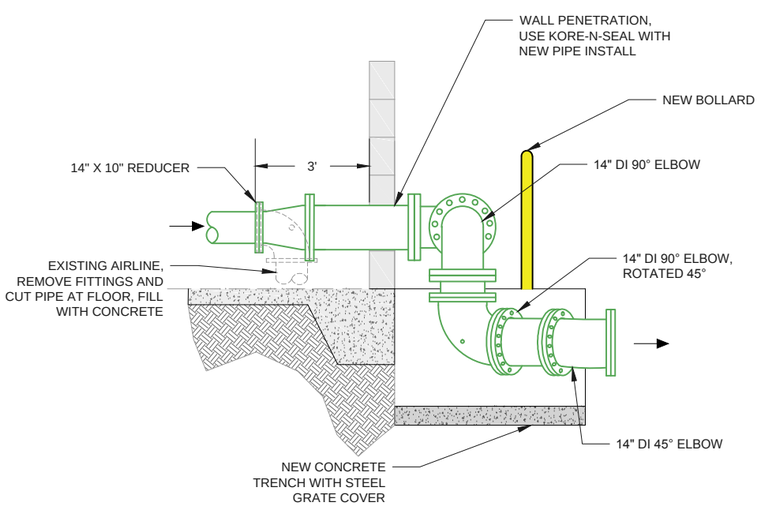

A
D2

BUILDING TO TRENCH PROFILE VIEW

NOT TO SCALE

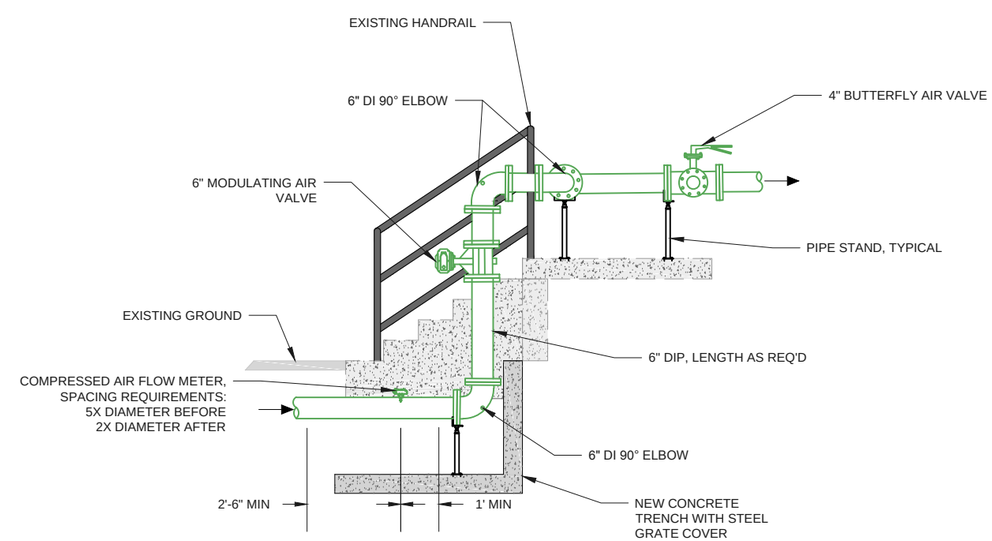

B
D2

TRENCH TO SIDEWALK PROFILE VIEW

NOT TO SCALE

REGISTERED PROFESSIONAL ENGINEER
83524PE
OREGON
NOV. 10, 2009
MATTHEW D. WADLINGTON

EXPIRATION DATE: 06/30/2016

Civil West Engineering Services, Inc.
486 E Street
Coos Bay, Oregon 97420
541-266-8601
www.civilwest.com

REV.	DATE	DESCRIPTION	BY

Designed By: MDW
Drawn By: JBJ
Checked By: JGP
Project No: 3101-006

CITY OF VENETA
88184 8th St, Veneta, OR 97487

AIR PIPING UPGRADES

BUILDING TRANSITION & SIDEWALK TRANSITION DETAILS

Sheet No. D2

Date April 2015

DATE:4/30/15 FILE:Z:\CW_Projects\3101 Veneta\3101-006 - Air Piping Design & Construction\Drawings\Dwg\Veneta-air piping improvements- working.dwg

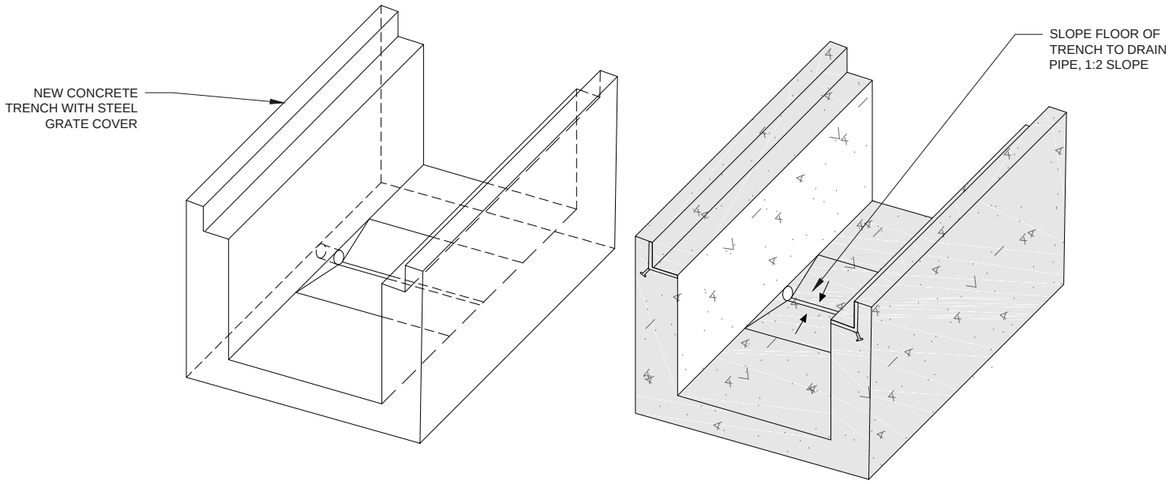

A / D3 TRENCH DRAIN (ISOMETRIC VIEW)

NOT TO SCALE

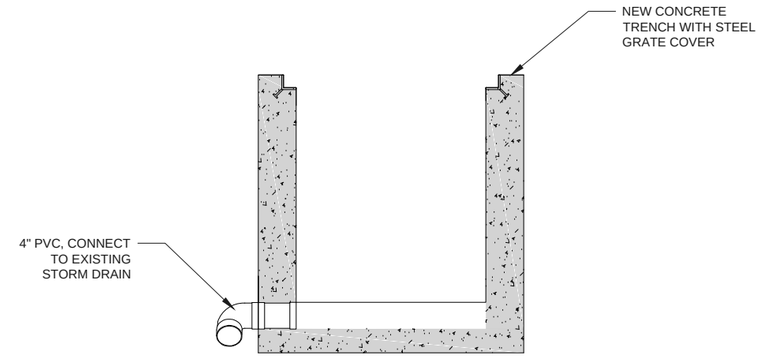

B / D3 TRENCH DRAIN (FRONT VIEW)

NOT TO SCALE

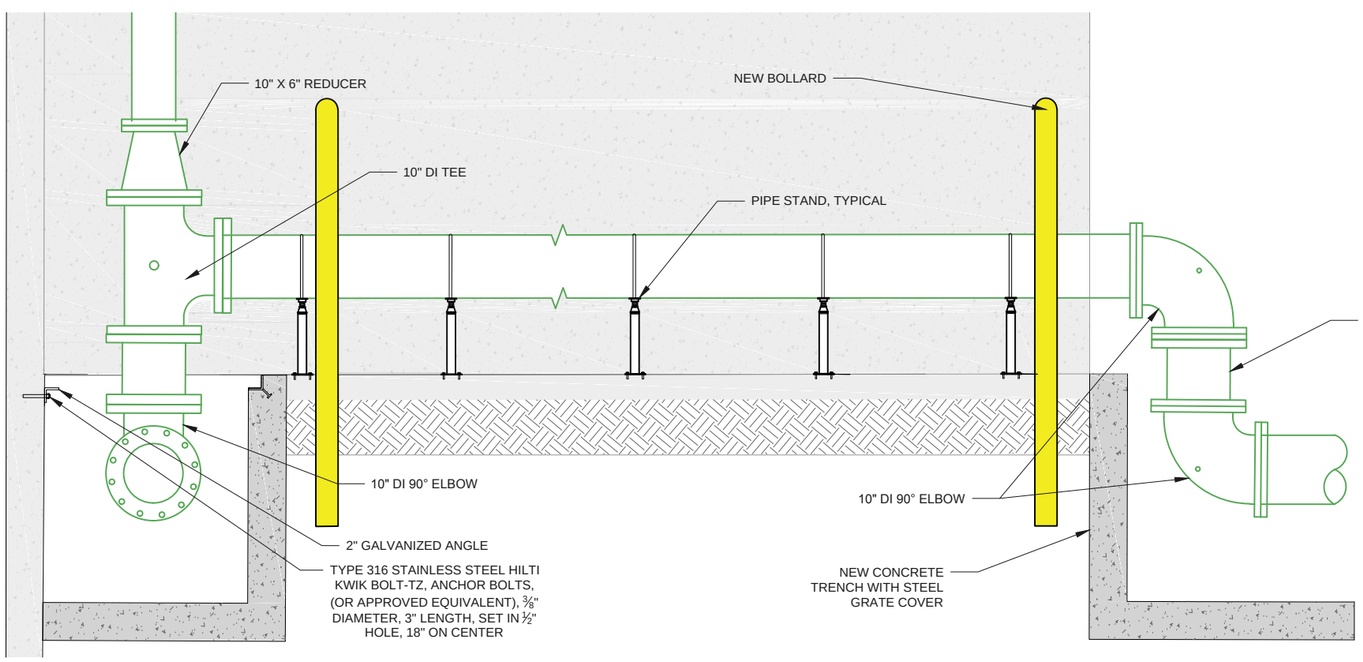

C / D3 TRANSITION NEXT TO AERATION BASIN

NOT TO SCALE

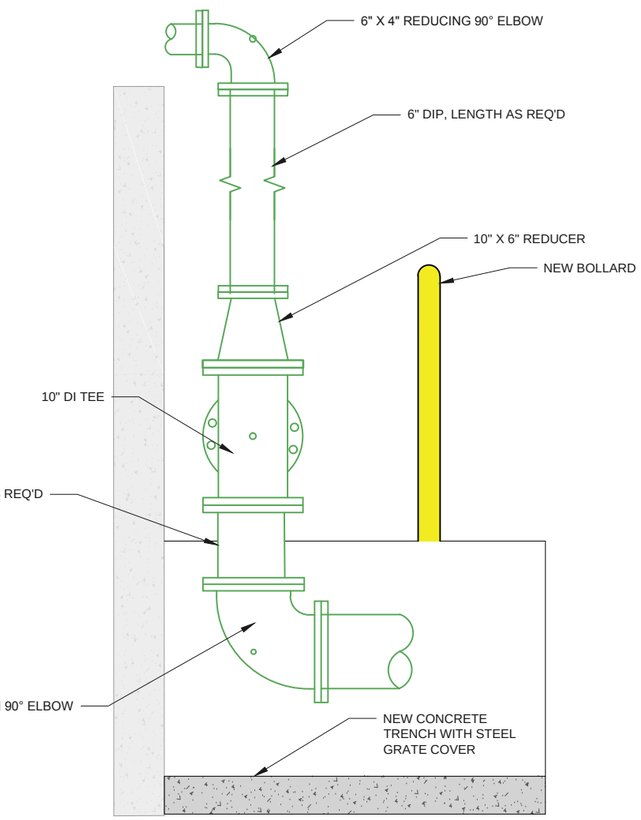

D / D3 TRANSITION AT END (SIDE VIEW)

NOT TO SCALE

REGISTERED PROFESSIONAL ENGINEER
83524PE
OREGON
NOV. 10, 2009
MATTHEW D. WADLINGTON

EXPIRATION DATE: 06/30/2016

Civil West Engineering Services, Inc.
486 E Street
Coos Bay, Oregon 97420
541-266-8601
www.civilwest.com

REV.	DATE	DESCRIPTION	BY

Designed By: MDW
Drawn By: JBJ
Checked By: JGP
Project No: 3101-006

CITY OF VENETA
88184 8th St, Veneta, OR 97487

AIR PIPING UPGRADES

TRENCH DRAIN AND TRANSITION TO GROUND DETAILS

Sheet No. D3

Date April 2015

DATE:4/30/15 FILE:Z:\CW_Projects\3101 Veneta\3101-006 - Air Piping Design & Construction\Drawings\Dwg\Veneta-air piping improvements- working.dwg

GENERAL NOTES

1. ALL CONSTRUCTION SHALL BE MADE TO THE MINIMUM STANDARDS IN THESE PLANS OR THE LATEST NEC CODE, WHICHEVER IS MORE STRINGENT. IF THE INTENT ON THE PLANS IS TO BE CONSTRUCTED DIFFERENTLY THAN CODE IT WILL SPECIFICALLY BE CALLED OUT.

2. COMPONENTS AND WIRING METHODS MAY BE OVERSIZED IN LOCATIONS. THIS IS TO PROVIDE CAPACITY FOR ANTICIPATED FUTURE EXPANSION.

3. CONTACTOR MAY SEPARATE OR COMBINE PARALLEL CONDUIT RUNS. CONDUIT FILL SHALL NOT EXCEED 30% OF CROSSECTIONAL AREA. CHANGES MUST BE MADE WITH APPROVAL OF THE ENGINEER.

4. CONDUIT ROUTING SHOWN ON PLAN SHEETS IS APPROXIMATE AND INTENDED TO CONVEY TO THE CONTRACTOR THE GENERAL PATH. CONTRACTOR SHOULD USE BEST JUDGEMENT WHEN CONNECTING EQUIPMENT.

5. SUBSURFACE EXISTING AND NEW APPURTENANCES ARE DRAWN TO BEST AVAILABLE INFORMATION. UNKNOWN UNDERGROUND EQUIPMENT MAY EXIST. CONNECTION ADJUSTMENTS DUE TO EQUIPMENT SUBMITTALS ARE THE DUTY OF THE CONTRACTOR TO ACCOUNT FOR.

6. CHANGES TO THE ONE-LINE DRAWING AND EQUIPMENT PLACEMENT MUST BE MADE THROUGH THE SUBMITTAL PROCESS WITH APPROVAL FROM THE ENGINEER PRIOR TO CONSTRUCTION.

BASIC MATERIALS

1. EQUIPMENT OUTDOORS

   A. ELECTRICAL PANELS-NEMA 4X.
   B. CONTROL PANELS-NEMA 4X.
   C. CONDUIT-PVC SCH 80
   D. BOXES-PVC
   E. RECEPTACLES-WEATHERPROOF
   F. WIRE-XWWH-2 CU

2. EQUIPMENT INDOORS

   A. PANELS-NEMA 12
   B. CONDUIT-EMT
   C. BOXES-GALVANIZED
   D. RECEPTACLES-GFI
   E. WIRE-THHN CU

ONE LINE SYMBOLS

- M — METER BASE
- FUSIBLE DISCONNECT
- NON-FUSIBLE DISCONNECT
- K1 15KVA 230V K=4 — TRANSFORMER, SIZE, RATING, K-RATING
- 7.5 — PUMP, HORSEPOWER RATING
- 75 — GENERATOR, KWA RATING
- 25 — MOTOR, HORSEPOWER
- VARIABLE FREQUENCY DRIVE W/ INTEGRAL BREAKER
- SURGE PROTECTION DEVICE
- 20A — RECEPTACLE CIRCUIT, RATING
- FLOURESCENT LIGHTING
- 20/1 — CIRCUIT BREAKER, RATING/POLES
- MS — MOTOR STARTER
- EARTH GROUND
- LOCAL GROUND
- S — SENSORS
- HARMONIC FILTER
- FUSE
- NORMALLY OPEN RELAY
- NORMALLY CLOSED RELAY

DRAWING SYMBOLS

- DISCONNECT
- ELECTRICAL PANEL
- E45 — CIRCUIT NUMBER (45) WITH INDICATION OF DISTRIBUTION BOARD (E)
- FLEXIBLE CONDUIT
- PANEL A — PANEL, IDENTIFIER

ONE-LINE LINETYPES

- ELECTRICAL CONNECTION LINE
- PANEL BOUNDARY
- GROUND CONNECTION

DRAWING LINETYPES

- ELECTRICAL CONDUIT
- CONTROL CONDUIT
- UTILITY LINES

HATCH TYPES

- DUCT BANK
- ASPHALT/CONCRETE
- COMPACTED AGGREGATE
- EARTH
- WOOD

ELECTRICAL ABBREVIATIONS

A	AMPERES	HZ	HERTZ	ANA	ANALOG
V	VOLTS	COMM	COMMUNICATION	OIT	OPERATOR INTERFACE TERMINAL
W	WATTS	ENET	ETHERNET	TVSS	TRANSIENT VOLTAGE SURGE SUPPRESSOR
KVA	KILOVOLT AMPERES	PH	PHASE	GFI	GROUND FAULT INTERRUPTOR
Cu	COPPER	TRANS	TRANFORMER	WP	WEATHER PROOF
ϕ	ELECTRICAL PHASE	HORIZ	HORIZONTAL	FOR	FORWARD-OFF-REVERSE
VFD	VARIABLE FREQUENCY DRIVE	VERT	VERTICAL	FS	FAST-SLOW
HMI	HUMAN MACHINE INTERFACE	FU	FUSE	HOA	HAND-OFF-AUTO
AIC	AVAILABLE INTERRUPTING CURRENT	TB	TERMINAL BLOCK	JS	JOG-STOP
NC	NORMALLY CLOSED	DPI	DEVICE PORT INTERFACE	LF	LEAD-FOLLOW
NO	NORMALLY OPEN	I/O	INPUT OUTPUT	OC	OPEN-CLOSE
PLC	PROGRAMMABLE LOGIC CONTROLLER	DIG	DIGITAL	OO	ON-OFF
D/C	DISCONNECT	F/B	FEEDBACK	OSC	OPEN-STOP-CLOSE
GND	GROUND			SS	START-STOP
AWG OR #	AMERICAN WIRE GAUGE			SHA	SELECT-HOLD-AUTO
				MOM	MOMENTARY
				HIM	HUMAN INTERFACE MODULE

REGISTERED PROFESSIONAL ENGINEER
83853PE
OREGON
FEB. 28, 2013
JEREK BRADEN HODGE
EXPIRATION DATE: 6/30/15

Civil West Engineering Services, Inc.
486 E Street
Coos Bay, Oregon 97420
541-266-8601
www.civilwest.com

REV.	DATE	DESCRIPTION	BY

Designed By: MDW
Drawn By: JBJ
Checked By: JGP
Project No: 3101-006

CITY OF VENETA
88184 8th St, Veneta, OR 97487

AIR PIPING UPGRADES

ELECTRICAL LEGEND

Sheet No. E1
Date April 2015

DATE:4/30/15 FILE:Z:\CW_Projects\3101 Veneta\3101-006 - Air Piping Design & Construction\Drawings\Dwg\Veneta-air piping improvements-electrical.dwg

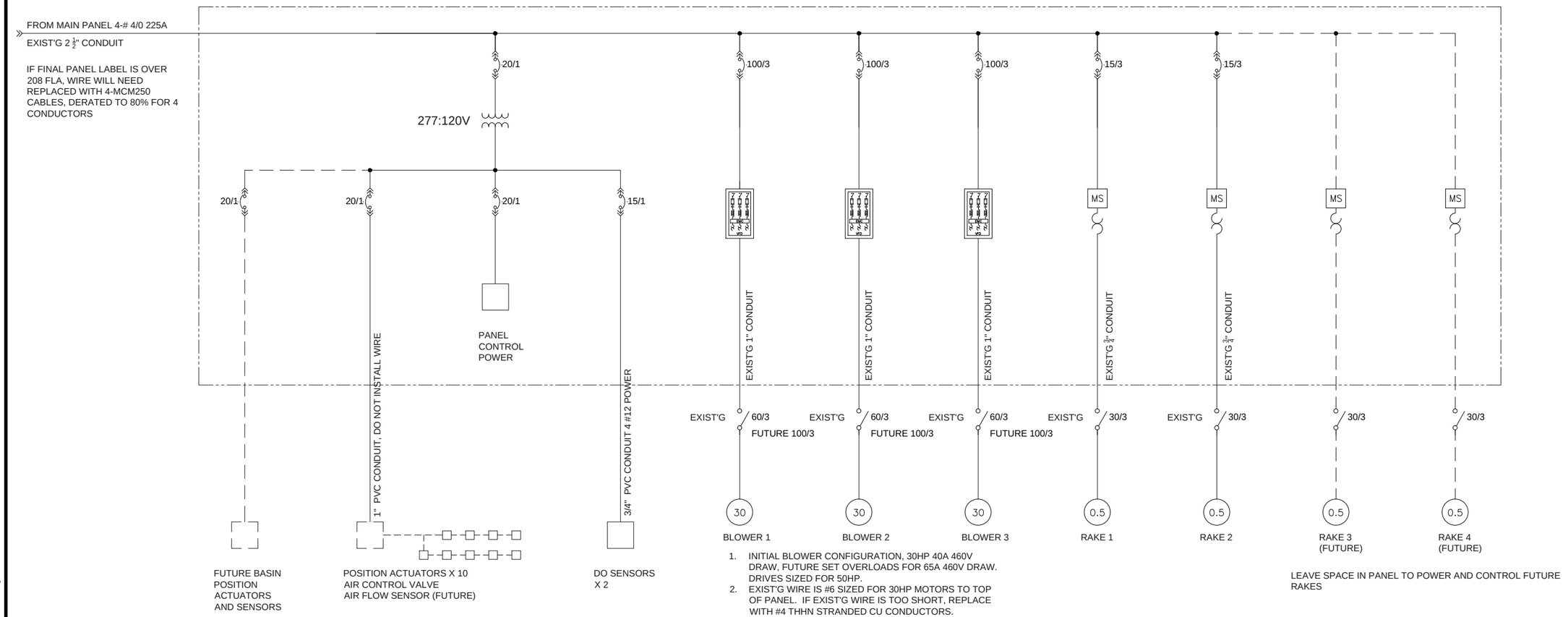

1. INITIAL BLOWER CONFIGURATION, 30HP 40A 460V DRAW, FUTURE SET OVERLOADS FOR 65A 460V DRAW. DRIVES SIZED FOR 50HP.
2. EXIST'G WIRE IS #6 SIZED FOR 30HP MOTORS TO TOP OF PANEL. IF EXIST'G WIRE IS TOO SHORT, REPLACE WITH #4 THHN STRANDED CU CONDUCTORS.

1 / E2 — ONE-LINE DIAGRAM

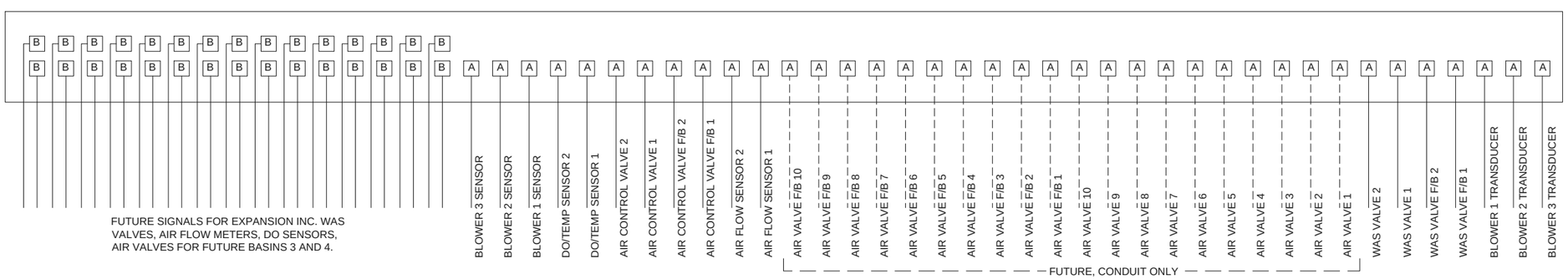

1. EXIST'G AND NEW SIGNALS FOR NEW CONTROL PANEL, CHECK REQUIREMENTS AGAINST INSTALLED EQUIPMENT AND SUBMITTALS FOR NEW CONTROL VALVES AND SENSORS, INFORMATION ONLY APPROXIMATE FROM RECORD DRAWINGS
2. WAS VALVES ASSUMED TO BE 24VDC OPERATED, CHECK IN FIELD

1 / E2 — CONTROL LINE CONNECTIONS

REGISTERED PROFESSIONAL ENGINEER
83853PE
OREGON
FEB. 28, 2013
JEREK BRADEN HODGE
EXPIRATION DATE: 6/30/15

Civil West Engineering Services, Inc.
486 E Street
Coos Bay, Oregon 97420
541-266-8601
www.civilwest.com

REV.	DATE	DESCRIPTION	BY

Designed By: MDW
Drawn By: JBJ
Checked By: JGP
Project No: 3101-006

CITY OF VENETA
88184 8th St, Veneta, OR 97487

AIR PIPING UPGRADES

CONTROL LINE CONNECTIONS

Sheet No. E2
Date April 2015

DATE:4/30/15 FILE:Z:\CIV_Projects\3101 Veneta\3101-006 - Air Piping Design & Construction\Drawings\Dwg\Veneta-air piping improvements-electrical.dwg

CONDUIT AND WIRE TABLE

CONDUIT	SIZE & QTY	WIRE	CONNECTION
C1	1" SCH 80 PVC	WET RATED SIGNAL CABLING DO/TEMP READ	DO SENSOR CONTROLLER
C2	1" SCH 80 PVC	FUTURE, TERMINATE CONDUIT WHERE SHOWN	ACTUATOR POSITION FEEDBACK (10)
C3	1" SCH 80 PVC	WET RATED SIGNAL CABLING FOR FLOW CONTROL	AIR FLOW CONTROL VALVES (2)
C4	¾" SCH 80 PVC	WET RATED SIGNAL CABLING FOR AIRFLOW READ AND FEEDBACK	AIR FLOW METERS (2)
C5	1" SCH 80 PVC	DO SENSOR CABLE 80'	DO SENSOR (1)
C6	1" SCH 80 PVC	DO SENSOR CABLE 80'	DO SENSOR (1)
P1	¾" SCH 80 PVC	2-#12 XHHW-2 & GND	HACH SC200 CONTROLLERS
P2	1 1/4" SCH 80 PVC	FUTURE, TERMINATE CONDUIT WHERE SHOWN	ACTUATORS
P3	1" SCH 80 PVC	4-#12 XHHW-2 & GND	AIRFLOW METERS AND CONTROL VALVES
P4	2 ½" EMT	EXIST'G 4/0	EMERGENCY PANEL
P5	1" EMT	EXIST'G #6	BLOWER 1
P6	1" EMT	EXIST'G #6	BLOWER 2
P7	1" EMT	EXIST'G #6	BLOWER 3
C7	1/2" EMT	BELDEN TWISTED 4-20MA	BLOWER 1
C8	1/2" EMT	BELDEN TWISTED 4-20MA	BLOWER 2
C9	1/2" EMT	BELDEN TWISTED 4-20MA	BLOWER 3

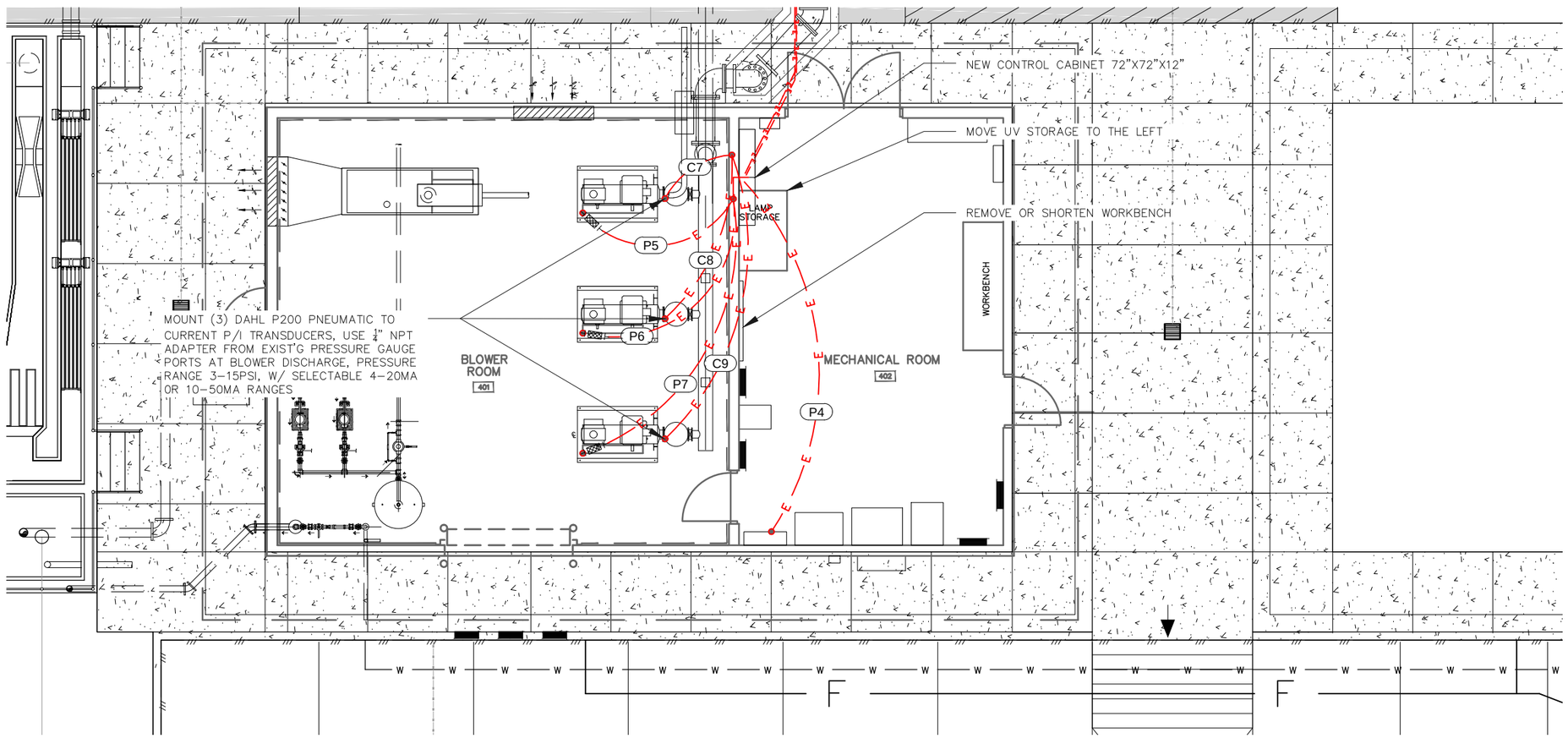

1
E3

CONDUIT CONNECTIONS INSIDE BUILDING

PLAN SCALE

4 0 4 8 8

1"=8'

REGISTERED PROFESSIONAL ENGINEER
83853PE
OREGON
FEB. 28, 2013
JEREK BRADEN HODGE

EXPIRATION DATE: 6/30/15

Civil West Engineering Services, Inc.
486 E Street
Coos Bay, Oregon 97420
541-266-8601
www.civilwest.com

REV.	DATE	DESCRIPTION	BY

Designed By: MDW
Drawn By: JBJ
Checked By: JGP
Project No: 3101-006

CITY OF VENETA
88184 8th St, Veneta, OR 97487

AIR PIPING UPGRADES

CONDUIT CONNECTIONS INSIDE CONTROL BUILDING

Sheet No. E3

Date April 2015

DATE:4/30/15 FILE:Z:\CW_Projects\3101 Veneta\3101-006 - Air Piping Design & Construction\Drawings\Dwg\Veneta-air piping improvements-electrical.dwg

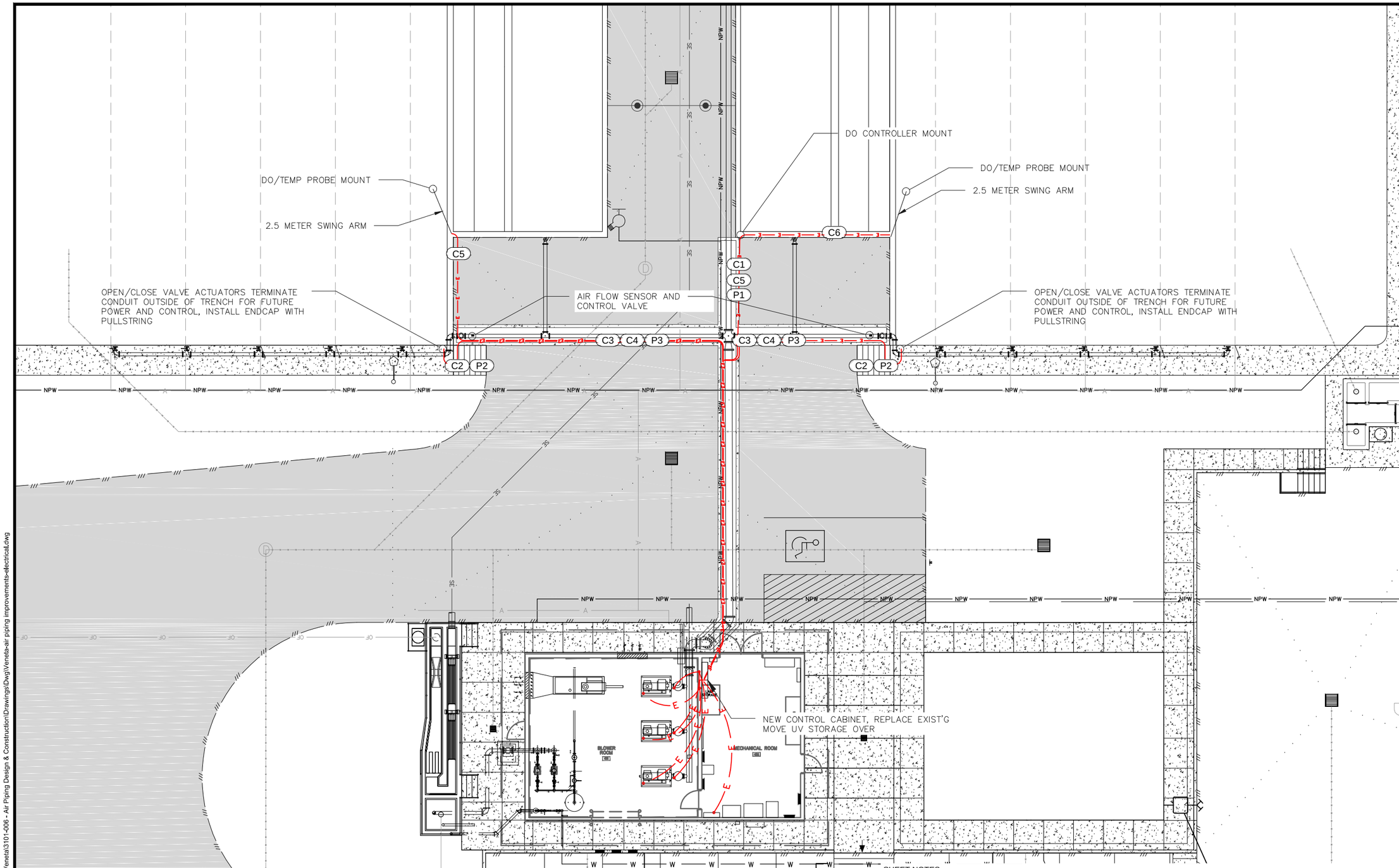

SHEET NOTES:

1) RUN CONDUIT AND MOUNT IN TRENCH DRAIN.
2) SEAL ALL CONDUIT WITH PVC CEMENT. ALL WIRE SHALL BE WET RATED DUE TO POSSIBLE IMMERSION IF CONDUIT LEAKS

N

1 / E4 CONDUIT CONNECTIONS

PLAN SCALE

10 0 5 10 20

1"=20'

REGISTERED PROFESSIONAL ENGINEER
83853PE
OREGON
FEB. 28, 2013
JEREK BRADEN HODGE

EXPIRATION DATE: 6/30/15

Civil West Engineering Services, Inc.
486 E Street
Coos Bay, Oregon 97420
541-266-8601
www.civilwest.com

REV.	DATE	DESCRIPTION	BY

Designed By: MDW
Drawn By: JBJ
Checked By: JGP
Project No: 3101-006

CITY OF VENETA
88184 8th St, Veneta, OR 97487

AIR PIPING UPGRADES

CONDUIT CONNECTIONS

Sheet No. E4

Date April 2015

DATE:4/30/15 FILE:Z:\CW_Projects\3101 Veneta\3101-006 - Air Piping Design & Construction\Drawings\Dwg\Veneta-air piping improvements-electrical.dwg